Print Calculation Sheet

Isolated Footing Design(ACI 318-14) - Metric

Footing No.	Group ID	Foundation Geometry		
-	-	Length	Width	Thickness
1	1	4.05m	4.05m	0.90m

Footing No.	Footing Reinforcement				Pedestal Reinforcement	
-	Bottom Reinforcement(M_z)	Bottom Reinforcement(M_x)	Top Reinforcement(M_z)	Top Reinforcement(M_x)	Main Steel	Trans Steel
1	33 - 16 mm	33 - 16 mm	N/A	N/A		N/A

Isolated Footing 1

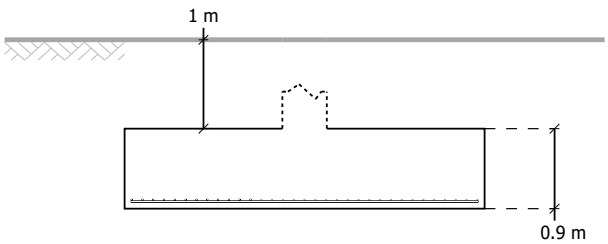

Elevation

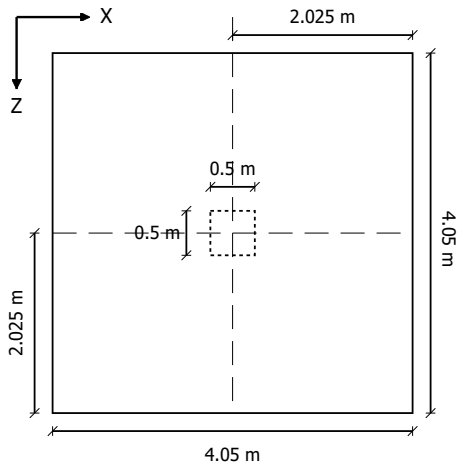

Plan

Input Values

Footing Geometry

Design Type :	Calculate Dimension with user specified minimums as starting value	
Minimum Footing Length - X(Fl) :	500.00	mm
Minimum Footing Width - Z (Fw) :	500.00	mm
Footing Thickness (Ft) :	300.00	mm
Eccentricity along X (Oxd) :	0.00	mm
Eccentricity along Z (Ozd) :	0.00	mm

Column Dimensions

Column Shape :	Rectangular	
Column Length - X (D_{col}) :	0.50	m
Column Width - Z (B_{col}) :	0.50	m

Pedestal

Include Pedestal :	No
Pedestal Shape :	N/A

Design Parameters

Concrete and Rebar Properties

Unit Weight of Concrete :	23.00	kN/m3
Strength of Concrete :	21.00	N/mm2
Yield Strength of Steel :	420.00	N/mm2
Minimum Bar Size :	16 mm	
Maximum Bar Size :	16 mm	
Top Footing Minimum Bar Size :	16 mm	
Top Footing Maximum Bar Size :	16 mm	
Pedestal Minimum Bar Size :	19 mm	
Pedestal Maximum Bar Size :	32 mm	
Minimum Bar Spacing :	100.00	mm
Maximum Bar Spacing :	1000.00	mm
Pedestal Clear Cover (P, CL) :	50.00	mm
Bottom Footing Clear Cover (F, CL) :	75.00	mm

Soil Properties

Unit Weight	:	19.00kN/m3
Base Value of Soil Bearing Capacity	:	300.00kPa
Multiplying factor for soil bearing capacity for ultimate loads	:	1.00
Soil Bearing Capacity Type	:	Net Bearing Capacity
Soil Surcharge	:	0.00kN/m2
Height of Soil above Footing	:	1.00m
Type of Depth	:	Fixed Top
Bearing Capacity Input Method	:	Fixed Bearing Capacity
Minimum Percentage of Slab area in Contact for Service Loads	:	0.00
Minimum Percentage of Slab area in Contact for Ultimate Loads	:	0.00

Sliding and Overturning

Coefficient of Friction :	0.50
Factor of Safety Against Sliding :	1.50
Factor of Safety Against Overturning :	1.50

Global Settings

Top Reinforcement Option :	Calculate only when foundation is subjected to uplift forces
Concrete Design Option :	Net Pressure(Gross Pressure - Self Weight Pressure)
Top Reinforcement Factor :	1.00

Design Calculations

Footing Size

Initial Length (L_o) = 0.50 m

Initial Width (W_o) = 0.50 m

Load Combinations

Load Combination/s- Service Stress Level					
Load Combination Number	Load Combination Title	Load Case Multiplier (a)	Soil Bearing Factor (b)	Self Weight Factor (c)	Code
a - Value specified in the Load Multiplier table b - Value specified in the Pile/Soil Bearing Capacity Factors table c - Value specified in the Apply Self Weight and Dead Weight Factor table					
1	DL	1.00	1.00	1.00	-
2	LL	1.00	1.00	1.00	-
3	DL + LL	1.00	1.00	1.00	-

Load Combination/s- Strength Level					
Load Combination Number	Load Combination Title	Load Case Multiplier (a)	Soil Bearing Factor (b)	Self Weight Factor (c)	Code
a - Value specified in the Load Multiplier table b - Value specified in the Pile/Soil Bearing Capacity Factors table c - Value specified in the Apply Self Weight and Dead Weight Factor table					
1	DL	1.00	1.00	1.00	-
2	LL	1.00	1.00	1.00	-
4	1.4DL	1.00	1.00	1.40	-
5	1.2DL + 1.6LL	1.00	1.00	1.20	-

Applied Loads on Top of Pedestal

Before consideration of self weight and load multiplier table

Moments are about the center of Column / Pedestal (does not include moments caused by lateral loads)
For the loads shown in this table, the sign convention is the same as that for JOINT LOADS in STAAD.Pro when global Y is the vertical axis.

Applied Loads from Column - Service Stress Level					
Load Case	F_x (kN)	F_y (kN) Downwards is negative Upwards is positive	F_z (kN)	M_x (kNm)	M_z (kNm)
1	0.00	-2000.00	0.00	0.00	0.00
2	0.00	-1500.00	0.00	0.00	0.00
3	0.00	-3500.00	0.00	0.00	0.00

Applied Loads from Column - Strength Level					
Load Case	F_x (kN)	F_y (kN) Downwards is negative Upwards is positive	F_z (kN)	M_x (kNm)	M_z (kNm)
1	0.00	-2000.00	0.00	0.00	0.00
2	0.00	-1500.00	0.00	0.00	0.00
4	0.00	-2800.00	0.00	0.00	0.00
5	0.00	-4800.00	0.00	0.00	0.00

Reduction of force due to buoyancy = 0.00 kN

Effect due to adhesion = 0.00 kN

Area from initial length and width, A_o = L_o X W_o = 0.25 m^2

Min. area required from bearing pressure, A_{min} = 12.34 m^2

Note: A_{min} is an initial estimation considering self-weight, axial load and moment against factored bearing capacity.

Final Footing Size

Length (L_2) = 4.05 m Governing Load Case : # 5

Width (W_2) = 4.05 m Governing Load Case : # 5

Depth (D_2) = 0.90 m

Depth is governed by Ultimate Load Case

(Service check is performed with footing thickness requirements from concrete check)

Area (A_2) = 16.44 m^2

Final Soil Height = 1.00 m

Weight of the footing + pedestal (if any) = 340.33 kN

Soil Weight On Top Of Footing = 307.63 kN

Net Pressures at 4 Corners

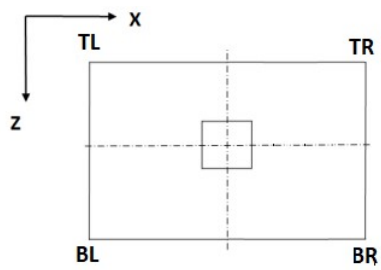

Load Case / Combination	Pressure at top left corner (kN/m2)	Pressure at top right corner (kN/m2)	Pressure at bottom right corner (kN/m2)	Pressure at bottom left corner (kN/m2)	Area of footing in uplift (A_u) (m^2)	Net Bearing Capacity (kN/m2)
3	**216.1882**	216.1882	216.1882	216.1882	0.00	300.0000
3	216.1882	**216.1882**	216.1882	216.1882	0.00	300.0000
3	216.1882	216.1882	**216.1882**	216.1882	0.00	300.0000
3	216.1882	216.1882	216.1882	**216.1882**	0.00	300.0000

If A_u is zero, there is no uplift and no pressure adjustment is necessary. Otherwise, to account for uplift, areas of negative pressure will be set to zero and the pressure will be redistributed to remaining corners.

Summary of Adjusted Net Pressures at four Corners

Load Case / Combination	Pressure at top left corner (kN/m2)	Pressure at top right corner (kN/m2)	Pressure at bottom right corner (kN/m2)	Pressure at bottom left corner (kN/m2)	Net Bearing Capacity (kN/m2)
3	**216.1882**	216.1882	216.1882	216.1882	300.0000
3	216.1882	**216.1882**	216.1882	216.1882	300.0000
3	216.1882	216.1882	**216.1882**	216.1882	300.0000
3	216.1882	216.1882	216.1882	**216.1882**	300.0000

Stability Check

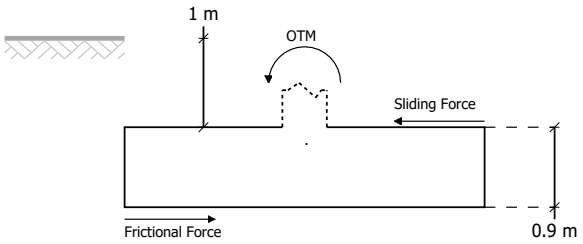

Passive Earth Pressure Resistance

Resisting Force Along X on Pedestal :	13.16	kN
Resisting Force Along Z on Pedestal :	13.16	kN
Resisting Force Along X on Footing :	278.59	kN
Resisting Force Along Z on Footing :	278.59	kN
Resisting moment about X on Pedestal :	16.19	kNm
Resisting moment about Z on pedestal :	16.19	kNm
Resisting moment about X on Footing :	112.39	kNm
Resisting moment about Z on Footing :	112.39	kNm

-	Factor of safety against sliding				Factor of safety against overturning		
Load Case No.	Along X-Direction	Along Z-Direction	Resultant	Required FOS	About X-Direction	About Z-Direction	Required FOS
1	N/A	N/A	N/A	1.50	N/A	N/A	1.50
2	N/A	N/A	N/A	1.50	N/A	N/A	1.50
3	N/A	N/A	N/A	1.50	N/A	N/A	1.50

Critical Load Case And The Governing Factor Of Safety For Overturning And Sliding - X Direction

Critical Load Case for Sliding along X-Direction :	N/A
Governing Disturbing Force :	N/A
Governing Restoring Force :	N/A
Minimum Sliding Ratio for the Critical Load Case :	N/A
Critical Load Case for Overturning about X-Direction :	N/A
Governing Overturning Moment :	N/A
Governing Resisting Moment :	N/A
Minimum Overturning Ratio for the Critical Load Case :	N/A

Critical Load Case And The Governing Factor Of Safety For Overturning And Sliding - Z Direction

Critical Load Case for Sliding along Z-Direction :	N/A
Governing Disturbing Force :	N/A
Governing Restoring Force :	N/A
Minimum Sliding Ratio for the Critical Load Case :	N/A
Critical Load Case for Overturning about Z-Direction :	N/A
Governing Overturning Moment :	N/A
Governing Resisting Moment :	N/A
Minimum Overturning Ratio for the Critical Load Case :	N/A

Critical Load Case And The Governing Factor Of Safety For Sliding Along Resultant Direction

Critical Load Case for Sliding along Resultant Direction :	N/A
Governing Disturbing Force :	N/A
Governing Restoring Force :	N/A
Minimum Sliding Ratio for the Critical Load Case :	N/A

Ultimate Gross Pressures

The base pressures reported in this table and the area of footing in contact include the effect of buoyancy (if any).

Load Case / Load Combination ID	Pressure at top left corner (kN/m2)	Pressure at top right corner (kN/m2)	Pressure at bottom right corner (kN/m2)	Pressure at bottom left corner (kN/m2)	Gross Factored Bearing Capacity For Ultimate Load Case (kN/m2)	Area of footing in Contact with soil (A_u) (m^2)
1	161.0538	161.0538	161.0538	161.0538	336.0987	16.44
2	130.6428	130.6428	130.6428	130.6428	336.0987	16.44
4	225.4754	225.4754	225.4754	225.4754	350.5382	16.44
5	**339.2375**	**339.2375**	**339.2375**	**339.2375**	343.3185	16.44

Minimum Required Contact Area for Ultimate Loads : 0.00 m^2

Actual Area in Contact for all ultimate load cases exceeds the minimum required. Hence Safe

Gross Bearing Capacity for Ultimate Loads : 343.32 kN/m2

Maximum Corner Pressure from all ultimate load cases is less than the allowable. Hence Safe

Shear Calculation

Punching Shear Check

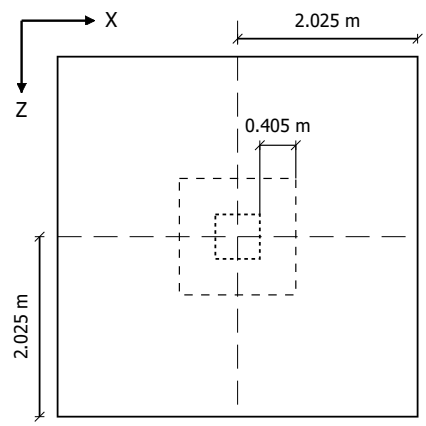

Plan

Total Footing Depth, D = 0.90m

Calculated Effective Depth, d = D - C_{cover} - 1 * d_b = 0.81 m

For rectangular column, β = B_{col} / D_{col} = 1.00

Effective depth, d, increased until 0.75X$V_c \geq$ Punching Shear Force

Punching Shear Force, Vu = 4305.74kN, Load Case # 5

From ACI Cl. 22.6.5.2, b_o for column= $2 \times (B_{COL} + D_{COL} + 2 \times d)$ = 5.24 m

Table 22.6.5.2, (b), V_{c1} = $0.17 \times \left(1 + \frac{2}{\beta}\right) \times \lambda \times \sqrt{f_c'} \times b_0 \times d$ = 9901.82 kN

Table 22.6.5.2, (c), V_{c2} = $0.083 \times \left(\frac{a_s \times d}{b_0} + 2\right) \times \lambda \times \sqrt{f_c'} \times b_0 \times d$ = 13182.78 kN

Table 22.6.5.2, (a), V_{c3} = $0.33 \times \lambda \times \sqrt{f_c'} \times b_0 \times d$ = 6407.06 kN

Punching shear strength, V_c = 0.75 X minimum of (V_{c1}, V_{c2}, V_{c3}) = 4805.29 kN

0.75 X V_c > V_u hence, OK

One-Way Shear in XY Plane

(Shear Plane Parallel to Global X Axis)

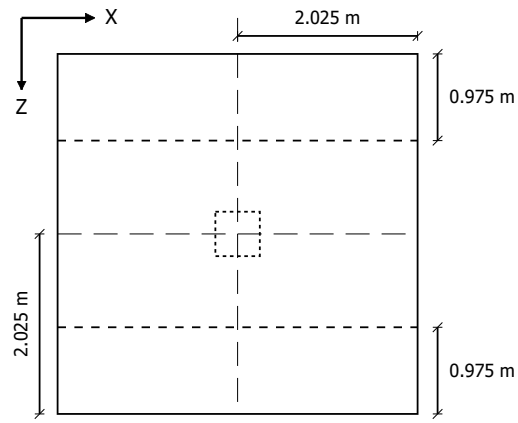

Plan

From ACI Cl. 22.5.5.1, V_c = $0.17 \times \lambda \times b_w \times d \times \sqrt{f_c^{'}}$ = 2530.71 kN

Distance of critical section from top left corner along Z, D_Z = $0.5 \times (L \pm D_{col}) - d + O_{zd}$ = 0.98 m

Check that 0.75 X V_c > V_{ux} where V_{ux} is the shear force for the critical load cases at a distance d from the face of the column caused by bending about the X axis.

From above calculations, 0.75 X V_c = 1898.03 kN

Critical load case for V_{ux} is # 5 $V_{ux} = V_{ux \mid z=Dx}$ = 1155.67 kN

0.75 X V_c > V_{ux} hence, OK

One-Way Shear in YZ Plane

(Shear Plane Parallel to Global Z Axis)

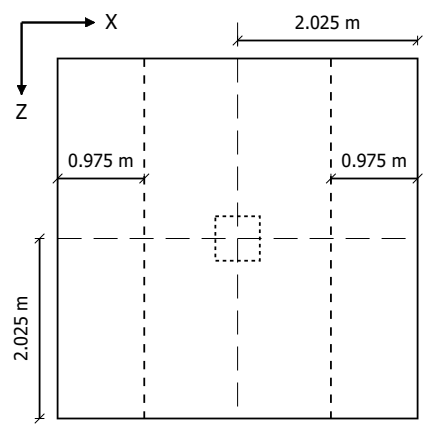

Plan

From ACI Cl. 22.5.5.1, V_c = $0.17 \times \lambda \times b_w \times d \times \sqrt{f_c^{'}}$ = 2530.71 kN

Distance of critical section from top left corner along X, D_X = $0.5 \times (L \pm B_{col}) - d + O_{xd}$ = 0.98 m

Check that **0.75 X V_c > V_{uz}** where V_{uz} is the shear force for the critical load cases at a distance d from the face of the column caused by bending about the Z axis.

From above calculations, 0.75 X V_c = 1898.03 kN

Critical load case for V_{uz} is # 5 $V_{uz} = V_{uz \mid x=Dz}$ = 1155.67 kN

0.75 X V_c > V_{uz} hence, OK

Flexure About Z-Axis

Design For Bottom Reinforcement Parallel to X Axis

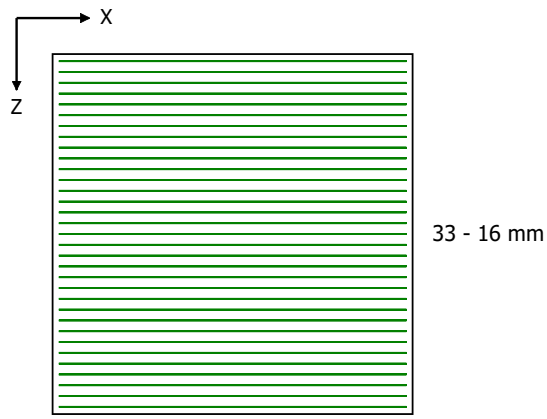

Calculate the flexural reinforcement along the X direction of the footing. Find the area of steel required, A, as per Section 3.8 of Reinforced Concrete Design (5th ed.) by Salmon and Wang (Ref. 1)

Critical Load Case # 5

The strength values of steel and concrete used in the formulae are in Mpa

Bars parallel to X Direction are placed at bottom

Effective Depth d		=	0.80	m
Factor β_1 from ACI Cl. 22.2.2.4.3 =	$\begin{cases} 0.85, & f_c' \le 28\ Mpa \\ \max\left[0.65, 0.85 - \frac{0.05}{7}(f_c' - 28\ Mpa)\right], & f_c' > 28\ Mpa \end{cases}$	=	0.85	
From ACI318-2011 Appendix B 8.4.2, ρ_{bal} =	$\frac{0.85 \times \beta_1 \times f_c'}{f_y} \times \left(\frac{600}{600 + f_y}\right)$	=	0.02125	
From ACI318-2011 Appendix B 10.3.3, ρ_{max} =	$0.75 \times \rho_{bal}$	=	0.01594	
From ACI Cl. 7.6.1.1, ρ_{min} =	$\begin{cases} 0.0020 & f_y < 420\ \text{Mpa} \\ \max\left[0.0014, \frac{0.0018 \times 420}{f_y}\right] & f_y \ge 420\ \text{Mpa} \end{cases}$	=	0.00180	
From Ref.1, Eq. 3.8.4a, constant m =	$\frac{f_y}{0.85 \times f_c'}$	=	23.53	

Calculate reinforcement ratio ρ for critical load case

Design for flexure about Z axis is performed at the face of the column at a distance from top left corner of footing, D_x =	$0.5 \times (L \pm B_{col}) + O_{xd}$	=	2.28	m
Ultimate moment =	$M_u\|_{z = D_z}$	=	1869.84	kNm
Nominal moment capacity required, M_n =	$\frac{M_u}{\Phi}$	=	2077.60	kNm
(Based on effective depth) Required ρ =	$\frac{1}{m}\left[1 - \sqrt{1 - 2 \times m \times \frac{M_n}{(f_y \times b_w \times d^2)}}\right]$	=	0.00195	
(Based on gross depth)ρ x d / Depth		=	0.00173	
Since	$\rho < \rho_{min}$, select $\rho = \rho_{min}$		ρ_{min} Governs	
Area of Steel Required, A_s =	$\rho \times b_w \times d$	=	6568.69	mm2

Note - "Area of Steel required" reported here is the larger value between the calculated area of steel and minimum steel required as per code stipulations

Selected bar Size = 16 mm

Minimum spacing allowed (S_{min}) = 100.00mm

Selected spacing (S) = 121.53mm

$S_{min} <= S <= S_{max}$ and selected bar size < selected maximum bar size

The reinforcement is accepted.

According to ACI 318 Clause No- 24.3.2

Max spacing for Cracking Consideration = 192.39mm

Safe for Cracking Aspect.

Based on spacing reinforcement increment; provided reinforcement is

16 mm @ 120mm o.c.

Required development length for bars = $\frac{d_b \times f_y}{2.1 \times \lambda \times \sqrt{f_c'}}$ = 0.69 m

Available development length for bars, D_L = $0.5 \times (L - D_{col}) - C_{cover}$ = 1.70 m

Try bar size 16 mm Area of one bar = 199.00 mm2

Number of bars required, N_{bar} = $\frac{A_s}{A_{bar}}$ = 33

Because the number of bars is rounded up, make sure new reinforcement ratio < ρ_{max}

Total reinforcement area, A_{s_total} = N_{bar} X (Area of one bar) = 6567.01 mm2

d = D - C_{cover} - 0.5 X (dia. of one bar) = 0.80 m

Reinforcement ratio, ρ = $\frac{A_{s\_total}}{d \times b_w}$ = 0.00202

From ACI Cl. 25.2.1, minimum req'd clear distance between bars

C_d = max (Diameter of one bar, 1.0" (25.4mm), Min. User Spacing) = 100.00mm

Provided Steel Area / Required Steel Area = 1.00

Flexure About X-Axis

Design For Bottom Reinforcement Parallel to Z Axis

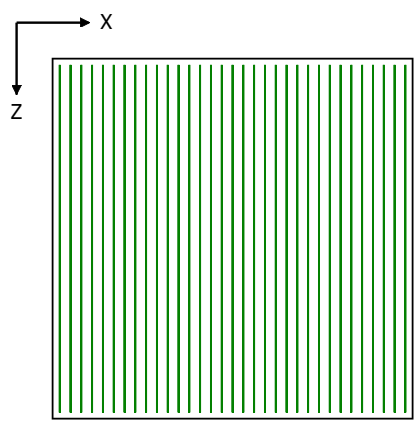

33 - 16 mm

Calculate the flexural reinforcement along the Z direction of the footing. Find the area of steel required, A, as per Section 3.8 of Reinforced Concrete Design (5th ed.) by Salmon and Wang (Ref. 1)

Critical Load Case # 5

The strength values of steel and concrete used in the formulae are in Mpa

Bars parallel to X Direction are placed at bottom

Effective Depth d = 0.80 m

Factor β_1 from ACI Cl. 22.2.2.4.3 = $\begin{cases} 0.85, & f_c' \le 28\ Mpa \\ \max\left[0.65, 0.85 - \frac{0.05}{7}(f_c' - 28\ Mpa)\right], & f_c' > 28\ Mpa \end{cases}$ = 0.85

From ACI318-2011 Appendix B 8.4.2, ρ_{bal} = $\frac{0.85 \times \beta_1 \times f_c'}{f_y} \times \left(\frac{600}{600 + f_y}\right)$ = 0.02125

From ACI318-2011 Appendix B 10.3.3, ρ_{max} = $0.75 \times \rho_{bal}$ = 0.01594

From ACI Cl. 7.6.1.1, ρ_{min} = $\begin{cases} 0.0020 & f_y < 420 \text{ Mpa} \\ \max\left[\ 0.0014,\ \dfrac{0.0018 \times 420}{f_y}\ \right] & f_y \geq 420 \text{ Mpa} \end{cases}$ = 0.00180

From Ref.1, Eq. 3.8.4a, constant m = $\dfrac{f_y}{0.85 \times f_c'}$ = 23.53

Calculate reinforcement ratio ρ for critical load case

Design for flexure about X axis is performed at the face of the column at a distance from top left corner of footing, D_z = $0.5 \times L \pm 0.5 \times B_{col} + O_{zd}$ = 2.28 m

Ultimate moment = $M_u|_{x = D_z}$ = 1869.84 kNm

Nominal moment capacity required, M_n = $\dfrac{M_u}{\Phi}$ = 2077.60 kNm

(Based on effective depth) Required ρ = $\dfrac{1}{m}\left[1 - \sqrt{1 - 2 \times m \times \dfrac{M_n}{(f_y \times b_w \times d^2)}}\right]$ = 0.00195

(Based on gross depth) ρ x d / Depth = 0.00173

Since $\rho < \rho_{min}$, select $\rho = \rho_{min}$ ρ_{min} Governs

Area of Steel Required, A_s = $\rho \times b_w \times d$ = 6568.69 mm2

Note - "Area of Steel required" reported here is the larger value between the calculated area of steel and minimum steel required as per code stipulations

Selected Bar Size = 16 mm

Minimum spacing allowed (S_{min}) = 100.00mm

Selected spacing (S) = 121.53mm

S_{min}<= S <= S_{max} and selected bar size < selected maximum bar size

The reinforcement is accepted.

Max spacing for Cracking Consideration = 192.39mm

Safe for Cracking Aspect.

Based on spacing reinforcement increment; provided reinforcement is

16 mm @ 120mm o.c.

Required development length for bars = $\dfrac{d_b \times f_y}{2.1 \times \lambda \times \sqrt{f_c'}}$ = 0.69 m

Available development length for bars, D_L = $0.5 \times (L - D_{col}) - C_{cover}$ = 1.70 m

Try bar size 16 mm Area of one bar = 199.00 mm2

Number of bars required, N_{bar}= $\dfrac{A_s}{A_{bar}}$ = 33

Because the number of bars is rounded up, make sure new reinforcement ratio < ρ_{max}

Total reinforcement area, A_{s_total} = N_{bar} X (Area of one bar) = 6567.01 mm2

d = D - C_{cover} - 1.5 X (dia. of one bar) = 0.80 m

Reinforcement ratio, ρ = $\dfrac{A_{s\_total}}{d \times b_w}$ = 0.00202

From ACI Cl. 25.2.1, minimum req'd clear distance between bars

C_d = max (Diameter of one bar, 1.0" (25.4mm), Min. User Spacing) = 100.00mm

Provided Steel Area / Required Steel Area = 1.00

Material Take Off

Footing Reinforcement

Direction	Size	Number	Total Length (m)	Weight (kg)
Along Z on Bottom Face	16 mm	33	128.86	200.01
Along X on Bottom Face	16 mm	33	128.86	200.01
Along Z on Top Face	N/A	N/A	N/A	N/A
Along X on Top Face	N/A	N/A	N/A	N/A

Total Reinforcement Weight : 400.02 kg

Concrete

-	Length (m)	Width (m)	Thickness (m)	Volume (m^3)
Footing	4.05	4.05	0.90	14.80
Pedestal	0.00	0.00	0.00	0.00

Total Concrete Volume : 14.80 m^3

Formwork

Footing : 14.60 m^2

Pedestal : 0.00 m^2

Total : 14.60 m^2

Soil Excavation

Pit Depth : 1.90 m

Pit Slope (a : b) : 1 : 1 (Assumed)

Side Distance, s : 0 (Assumed)

Excavation Volume : 69.66 m^3

Backfill Volume : 54.86 m^3

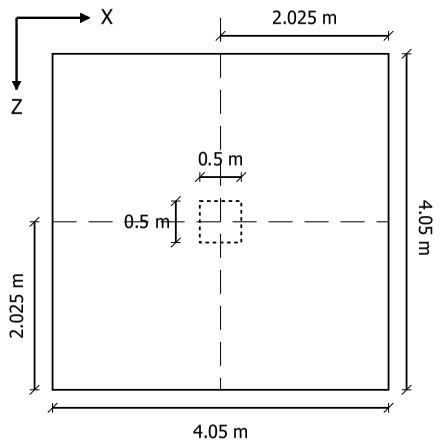

Plan

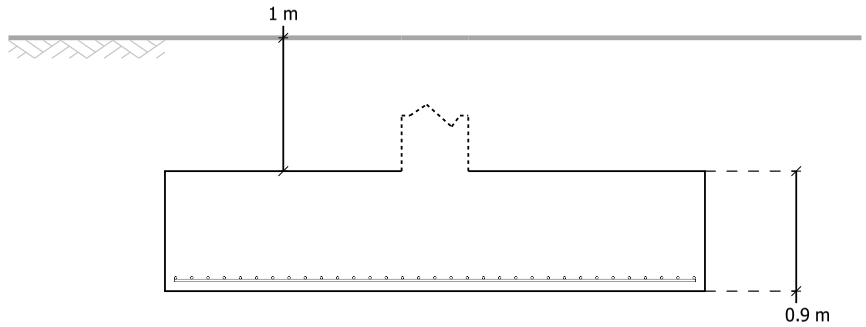

Elevation

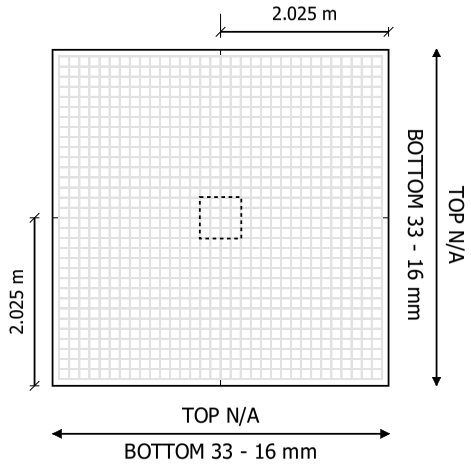

Plan

	Dimensions (m)			Reinforcement			
Foundation	L	B	D	AstX(T)	AstZ(T)	AstX(B)	AstZ(B)
	4.05 m	4.05 m	0.9 m	N/A	N/A	33 - 16 mm	33 - 16 mm
Pedestal	l	b	h	Main Reinforcement		Trans Reinforcement	
	N/A	N/A	N/A	N/A		N/A	