Euro Code Design in RCDC

- Available Codes:
  - ✓ BS EN 02 – 2004 - Design Of Concrete Structures
  - – BS EN 02 – 2004 + MS NA
  - – BS EN 02 – 2004 + UK NA
  - – BS EN 02 – 2004 + SS NA

    +
  - ✓ BS EN 1998 1 2004 – Design Of Structures For Earthquake Resistance
  - ✓ BS EN 1997 1 2004 – Geotechnical Design (Annex A & D)

 © 2019 Bentley Systems, Incorporated

Bentley

Content

- General
- Column
- Shear Wall
- Beam (Non-Ductile)
- Beam (Ductile)
- Footing
- Pile-cap
- Slab

 © 2019 Bentley Systems, Incorporated

Bentley

General

Material Safety Factor

DESCRIPTION	EURO
Concrete Strength	Cylinder
Safety Factor (Permanent Load)	1.15 And 1.5 For Concrete And Reinforcement Respectively
Safety Factor (Accidental Load)	1.0 And 1.2 For Concrete And Reinforcement Respectively

General Data

Column No.	:	C1
Level	:	0m To 4.2m
Design Code	=	EN 02 - 2004
Type of Frame	=	Ductile High
Grade Of Concrete (f_{ck}) (Cylindrical)	=	C20/25
Partial Factor for Concrete (γ_c)	=	1.5
Partial Factor for Concrete (γ_{cd})	=	1.2
Grade Of Steel (f_{yk})	=	Fy420
Partial Factor for Reinforcement (γ_s)	=	1.15
Partial Factor for Reinforcement (γ_{sd})	=	1

 © 2019 Bentley Systems, Incorporated

Bentley

Column

Design Settings & Slenderness Check

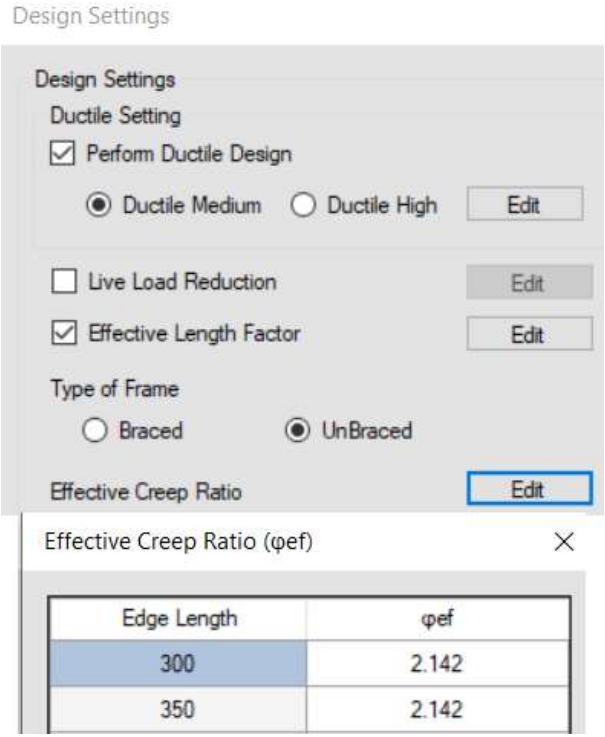

Calculation of SLENDERNESS CHECK		
	Along D	**Along B**
Crtical Load Combination	[13] : (LOAD 1: LOAD CASE 1) - (LOAD 4: LOAD CASE 4 EQ-Y)	[13] : (LOAD 1: LOAD CASE 1) - (LOAD 4: LOAD CASE 4 EQ-Y)
Ned (kN)	542.73	542.73
Mo1 (kNm)	12.33	82.9
Mo2 (kNm)	33.71	162.11
Radius of Gyration (i) (mm)	202.31	202.31
Φef	2.14	2.14
A = 1 / (1 + 0.2 x Φ ef)	0.7	0.7
B = Sqrt (1 + 2 ω)	1.07	1.07
rm = Mo1 / Mo2	-0.37	-0.51
C = 1.7 - rm	2.07	2.21
n = Ned / (B x D x fcd)	0.0665	0.0665
Slenderness ratio (λ) = lo / i	20.5	20.5
Permissible Limits (λ lim) = A x B x C / sqrt (n)	120.29	128.42
	Hence, Column is not Slender	Hence, Column is not Slender

 © 2019 Bentley Systems, Incorporated

Bentley

Column

Design Checks & PM Curve

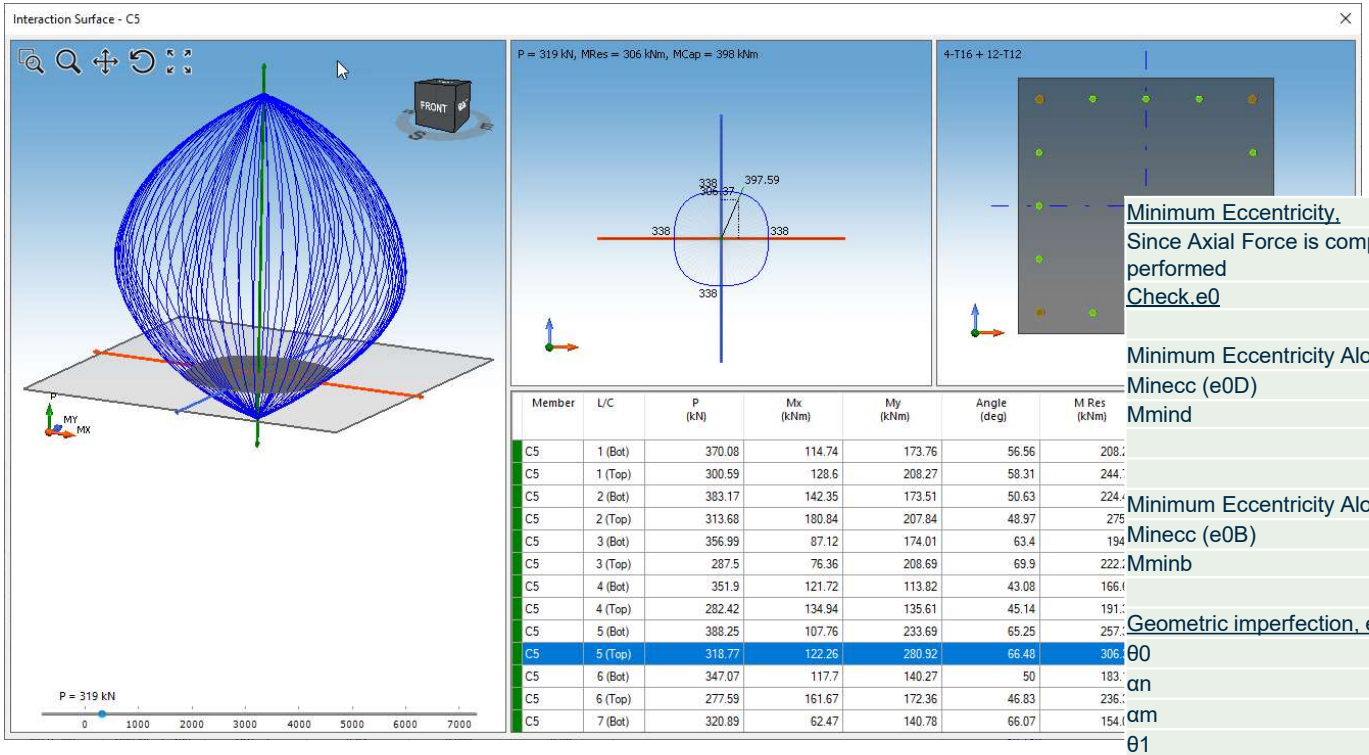

Member	L/C	P (kN)	Mx (kNm)	My (kNm)	Angle (deg)	M Res (kNm)
C5	1 (Bot)	370.08	114.74	173.76	56.56	208.
C5	1 (Top)	300.59	128.6	208.27	58.31	244.
C5	2 (Bot)	383.17	142.35	173.51	50.63	224.
C5	2 (Top)	313.68	180.84	207.84	48.97	275
C5	3 (Bot)	356.99	87.12	174.01	63.4	194
C5	3 (Top)	287.5	76.36	208.69	69.9	222.
C5	4 (Bot)	351.9	121.72	113.82	43.08	166.
C5	4 (Top)	282.42	134.94	135.61	45.14	191.
C5	5 (Bot)	388.25	107.76	233.69	65.25	257.
C5	5 (Top)	318.77	122.26	280.92	66.48	306.
C5	6 (Bot)	347.07	117.7	140.27	50	183.
C5	6 (Top)	277.59	161.67	172.36	46.83	236.
C5	7 (Bot)	320.89	62.47	140.78	66.07	154.

Minimum Eccentricity,			
Since Axial Force is compressive, Min. Eccentricity check to be performed			
Check,e0			
Minimum Eccentricity Along D:	=	D / 30	
Minecc (e0D)	=	23.33	mm
Mmind	=	Ned x Minimum Eccentricity	
	=	12.66	kNm
Minimum Eccentricity Along B:	=	B / 30	
Minecc (e0B)	=	23.33	mm
Mminb	=	Ned x Minimum Eccentricity	
	=	12.66	kNm
Geometric imperfection, ei			
θ0	=	0.005	
αn	=	0.976	
αm	=	1	
θ1	=	0.00488	Radian
Eccentricity ,(ei) (along both the directions)	=	10.12	mm
MgeoD	=	5.49	kNm
MgeoB	=	5.49	kNm

 © 2019 Bentley Systems, Incorporated

Bentley

Column

Ductile detailing

DESCRIPTION	EURO
Type Of Frame	DCM And DCH
Confining Links Calculations	“Hc” Is Calculated As Per Corner Bar Dimensions. “Ash” Is Different For Both Face. Max To Be Considered
Confining Links Detailing	Outer And Internal Links Act As Confining Links.
End Zone	DCM :D, Lc/6,450 DCH:1.5x D, Lc/6,600

Special confining reinforcement as per BS EN 1998-1:2004			
Volume of confining hoops, Ash			
diameter of link		8	mm
dbl	=	12	mm
ωwd	=	(30 x μØ x Vd x εsyd x (bc/bo) - 0.035) / α	
	=	0.08	
α=αn x αs	=	0.8306	
αn	=	0.9774	
αs	=	0.8499	
bc	=	700	mm
hc	=	700	mm
bo	=	608	mm
s	=	95	mm
ho=Do		608	
bi	=	95	mm
μφ	=	1.1	
Ned	=	697.3705	
Vd	=	Ned /(Ac x fcd)	
	=	0.0854	
εsyd	=	0.0025	
Volume of confining link per m	=	1555.56	sqmm/m
Zone for special confining links - criterion			
Max. Size of column, D	=	700	mm
Clear height/6	=	566.67	mm
Minimum value	=	450	mm
Hence length of confining zone	=	700	mm

 © 2019 Bentley Systems, Incorporated

Bentley

Column

Crack-width

Crack Width Check as per EN 02 - 2004

Location	Bottom	Top
Critical Load Combination	10001	10001
Member Force		
P (kN)	1030.5865	979.1159
Mx (kNm)	21.4427	39.0995
My (kNm)	16.1749	26.5192
Reinforcement-Total	12-T12	12-T12
Corner Reinforcement - Dia	12	12
Ast - corner reinforcement - mm2	113.0973	113.0973
Neutral Axis Angle (Deg)	52.9716	55.8529
Neutral axis intersection (mm)	2110.4964	1361.2974
acr (mm)	73.196	73.196
Check for Stress in Reinforcement		
σ_{os} (N/sqmm)	39.4571	26.8088
$\sigma_{os,Perm}$ (N/sqmm)	336	336
Crack Width Check		
$\varepsilon_{sm} - \varepsilon_{cm}$	0.0002	0.0001
W_k	0.0361	0.0245
$W_{k,perm}$	0.2	0.2

Stress Limit Check as per BS EN

Location	Bottom	Top
Critical Load Combination	10001	10001
Member Force		
P (kN)	1030.5865	979.1159
Mx (kNm)	21.4427	39.0995
My (kNm)	16.1749	26.5192
Reinforcement - Total	12-T12	12-T12
Corner Reinforcement - Dia	12	12
Ast - corner reinforcement - mm2	113.0973	113.0973
Neutral Axis Angle (Deg)	52.9716	55.8529
Neutral axis intersection (mm)	2110.4964	1361.2974
Check for Stress in Reinforcement		
σ_{os} (N/sqmm)	39.4571	26.8088
$\sigma_{os,Perm}$ (N/sqmm)	336	336
Check for Stress in Concrete		
Fc (N/sqmm)	2.5487	2.8916
FcPerm (N/sqmm)	9	9

 © 2019 Bentley Systems, Incorporated

Bentley

Shear Wall

Boundary Element Wall Design

DESCRIPTION	EURO
Criteria To Satisfy Boundary Wall	All Ductile Wall Shall Be Design As Boundary Wall
Shear Force	Enhanced Shear Force Up To 1/3rd Height And 2/3rd Height
Detailing	Height Of Boundary Zones Decided As Per Parameters

Design Of Shear

Shear To Be Considered			
Till (1/3 x hw) height	=	1654.9225	kN
Above (1/3 x hw) height	=	827.4612	kN
kw	=	1	
q	=	kw x qo	
	=	4.5	

Shear Resistance For DCH Type

Along - D

Critical Load Combination	=	[4] : 1.35 (LOAD 1: LOAD CASE 1) +	
Design shear force, Vux	=	367.7606	kN
Ned	=	842.5	kN

For Diagonal Compression Failure Of Web

z	=	1920	mm
αcc	=	1827.2159	
fcd	=	16.6667	N/sqmm
v1	=	0.6	
σcp	=	Ned /(Fck x b x D)	
	=	0.0585	N/ sqmm
αcw	=	1.0029	
Vrdmax	=	2888.425	
Vrdmax (Critical Zone)	=	Vrdmax x 0.4	
		1155.37	

Hence Vrdmax > Vux

 © 2019 Bentley Systems, Incorporated

Bentley

Beam (Non-Ductile)

Design

DESCRIPTION	EURO
Design	Area Of Reinforcement For Torsion Is Calculated And Distributed In Longitudinal And Shear Reinforcement
Permissible Stress	Ratio Of Actual Vs Permissible Torsion And Shear Checked
Reinforcement Detailing	Area Of Reinforcement Is Distributed To Longitudinal, Shear + SFR To Be Provided

Flexure Design	-	-	-	-	-	-
	Beam Bottom			Beam Top		
	Left	Mid	Right	Left	Mid	Right
Critical L/C - RCDC	5	1	-	1	-	1
Mu (kNm)	-	339.68	-	435.77	-	485.15
Mu/(bd2 x Fck)	0	0.058	0	0.074	0	0.082
z (mm)	712.5	709.78	712.5	697.49	712.5	690.99
Doubly Reinforced Section						
M' (Excess Moment for Doubly Reinforced section) (kNm)	0	0	0	0	0	0
x (Distance of N.A.) (mm)	0	0	0	0	0	0
fsc (Compressive Stress in Steel) (N/sqmm)	0	0	0	0	0	0
Asc (Area of Compression Reinf.) (sqmm) (C)	0	0	0	0	0	0
ρ (%) (Flexural)	0	0.582	0	0.76	0	0.854
A_s (sqmm) (A)	0	1310.36	0	1710.66	0	1922.43
Ted (kNm)	0	26.51	0	26.51	0	59.11
$T_{Rd,c}$ (kNm)	53.89	43.11	43.11	43.11	43.11	43.11
As,min (Tor) (sqmm)	0	0	0	0	0	299.2
A_{sl} (sqmm)		0		0		2705.28
$A_{sl,dist}$ (sqmm) (D)		0		0		737.8
$A_s + A_{sl,dist}/2$ (sqmm)	0	1310.36	0	1710.66	0	2291.33
$A_{s,reqd}$ (sqmm)	859.81	1310.36	1207.54	1710.66	859.81	2291.33
$A_{s,prov}$ (sqmm)	804.24	1608.48	1608.48	1884.96	1472.61	2415.09
Reinforcement Provided	4-T16	4-T16	4-T16	3-T20	3-T25	3-T25
		4-T16	4-T16	3-T20		3-T20

 © 2019 Bentley Systems, Incorporated

Bentley

Beam (Non-Ductile)

Shear Design

Shear Design	-	-	-
	Left	Mid	Right
Critical L/C - RCDC	1	1	5
PtPrv (%)	1.073	0.458	0.654
V_{Ed} (kN)	138.93	93.14	252.63
T_{Ed} (kNm)	5.69	5.69	6.74
θ (Degree)	21.8	21.8	21.8
$T_{Rd,c}$ (kNm)	43.1095	43.1095	53.8869
t_{Ed} (N/sqmm)	0.1976	0.1976	0.2343
$t_{Rd,max}$ (N/sqmm)	8.303	8.303	10.3788
$T_{Rd,max}$ (kNm)	119.4736	119.4736	149.3421
$(T_{Ed} / T_{Rd,max}) + (V_{Ed} / V_{Rd,max})$	0.2129	0.1584	0.2856
V_t (kN)	0	0	0
$V_{Ed} + V_t$ (kN)	138.93	93.14	252.63
v_{Ed} (N/sqmm)	0.62	0.41	1.12
$v_{Rd,c}$ (N/sqmm)	0.61	0.46	0.65
$V_{Rd,c}$ (kN)	137.12	103.23	145.35
$v_{Rd,max}$ (N/sqmm)	4.15	4.15	5.19
$V_{Rd,max}$ (kN)	840.68	840.68	1050.85
A_{sw} (sqmm/m)	338.062	338.062	445.524
Legs	2	2	2
$Ø_{sv}$ (mm)	8	8	8
$s_{reqd.}$ (sqmm/m)	100	295	100
s_{prov} (sqmm/m)	100	295	100
$A_{sw,prov.}$ (sqmm/m)	1005.4	340.81	1005.4

 © 2019 Bentley Systems, Incorporated

Bentley

Beam (Ductile)

Detailing

DESCRIPTION	EURO
Type Of Frame	DCM And DCH
End Zone	D
Confining Link Spacing (Minimum Of)	**Dcm :** D/4 , 24 X Dia. Of Stirrups, 8 X Dia. Of Longitudinal Reinf. , 225 **Dch :** D/4 , 24 X Dia. Of Stirrups, 6 X Dia. Of Longitudinal Reinf. ,175

Maximum Spacing Criteria					
Basic					
Spc1 =0.75d		=	562		mm
Spc2		=	300		mm
For Torsion					
(X1 = 270, Y1 = 770)					
Spc3 = X1		=	270		mm
Spc4=(X1+Y1)/4		=	260		mm
For Ductility (DCH)					
Left Section					
Spc5 = 6 x Small Longitudinal Dia		=	96		mm
Spc6 = 24 x $Ø_{sv}$		=	192		mm
Spc7 = h / 4		=	188		mm
Spc8 = 175		=	175		mm
Provided Spacing		=	100		mm
Mid Section					
Provided Spacing		=	300		mm
Right Section					
Spc5 = 6 x Small Longitudinal Dia		=	96		mm
Spc6 = 24 x $Ø_{sv}$		=	192		mm
Spc7 = h / 4		=	188		mm
Spc8 = 175		=	175		mm
Provided Spacing		=	100		mm

 © 2019 Bentley Systems, Incorporated

Bentley

Beam (Ductile)

Coupling Beam

Check for coupling action

Beam Designed with Diagonal Reinforcement.

Design of diagonal reinforcement

Clear Span of Beam, L	=	1000	mm
Bw	=	400	mm
Beam Depth, D	=	900	mm
Effective Depth, deff	=	850	mm
Angle with horizontal, (α)	=	40.696	deg
Med	=	398.413	kNm
Ultimate Shear from analysis, Vu	=	796.82	kN
Act	=	1	
fcm	=	28	
fctm	=	2.21	
fctk	=	1.56	
fctd	=	1.14	
fctd x Bw x deff	=	526.47	
Asi	=	1419	
Detailing			
bo	=	310	mm
fyld	=	420	mm
fywd	=	420	mm
Diameter of Link	=	7	mm
Spacing of link,S	=	Max(Bo/3, 125, dbL x 6)	
	=	96	mm
Reinforcement provided	=	4-T16 4-T16 Both diagonals	

 © 2019 Bentley Systems, Incorporated

Bentley

Footing

- **Varying SBC- as per L/B & B Ratio – Annex A**

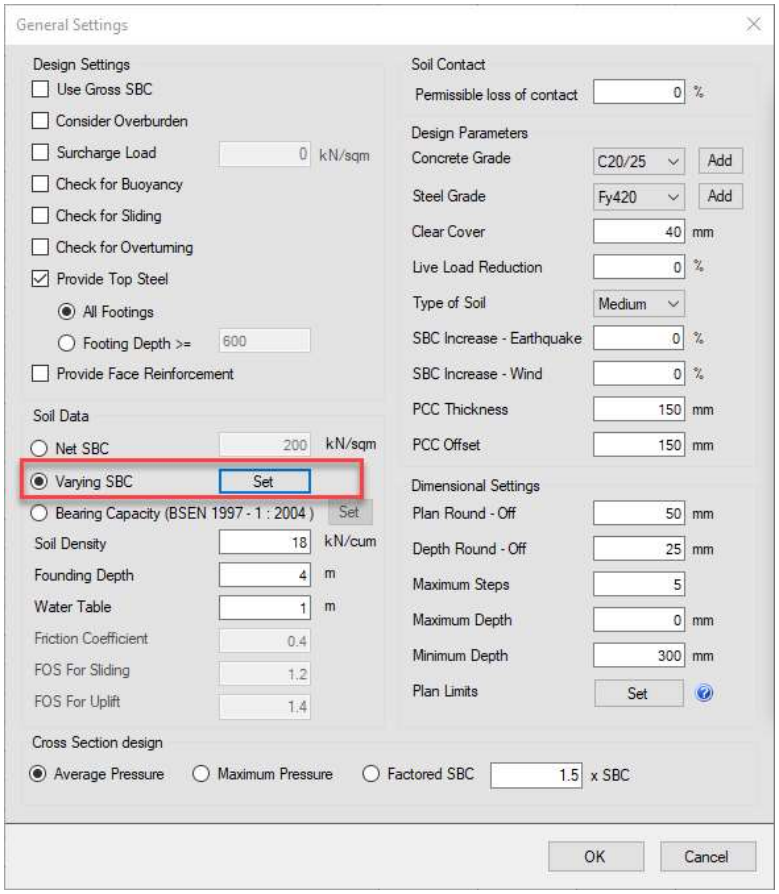

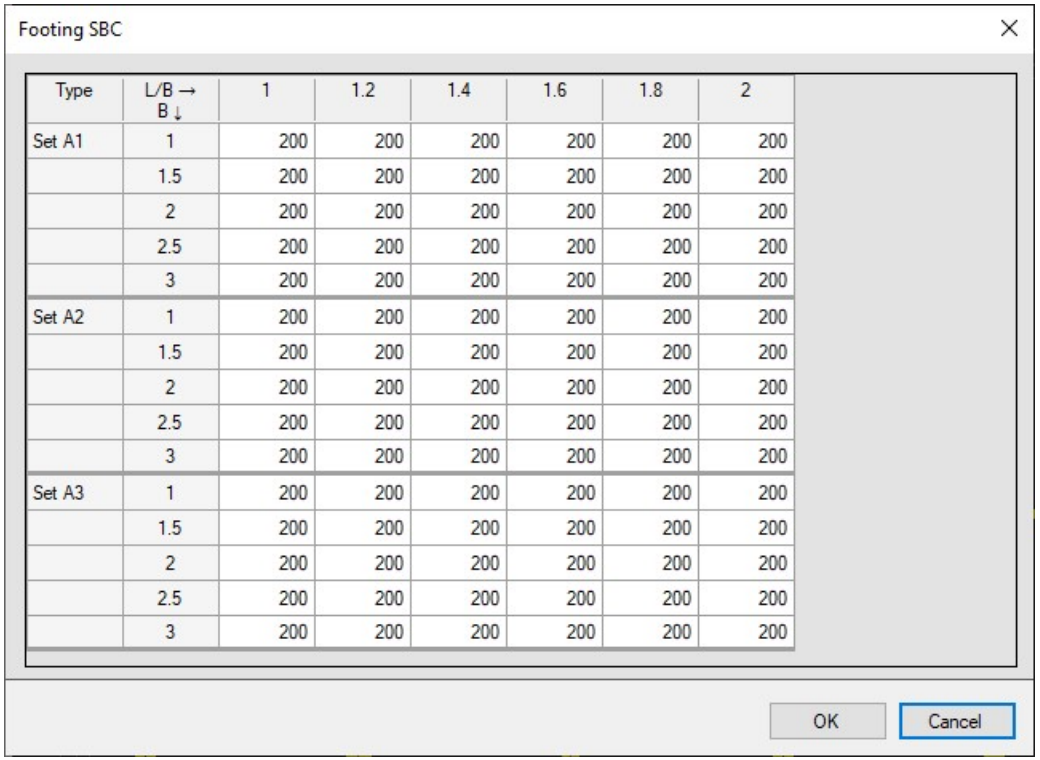

Footing SBC

Type	L/B → B ↓	1	1.2	1.4	1.6	1.8	2
Set A1	1	200	200	200	200	200	200
	1.5	200	200	200	200	200	200
	2	200	200	200	200	200	200
	2.5	200	200	200	200	200	200
	3	200	200	200	200	200	200
Set A2	1	200	200	200	200	200	200
	1.5	200	200	200	200	200	200
	2	200	200	200	200	200	200
	2.5	200	200	200	200	200	200
	3	200	200	200	200	200	200
Set A3	1	200	200	200	200	200	200
	1.5	200	200	200	200	200	200
	2	200	200	200	200	200	200
	2.5	200	200	200	200	200	200
	3	200	200	200	200	200	200

OK Cancel

 © 2019 Bentley Systems, Incorporated

Bentley

Footing

- **Annex D (BS EN 1997-1-2004)**

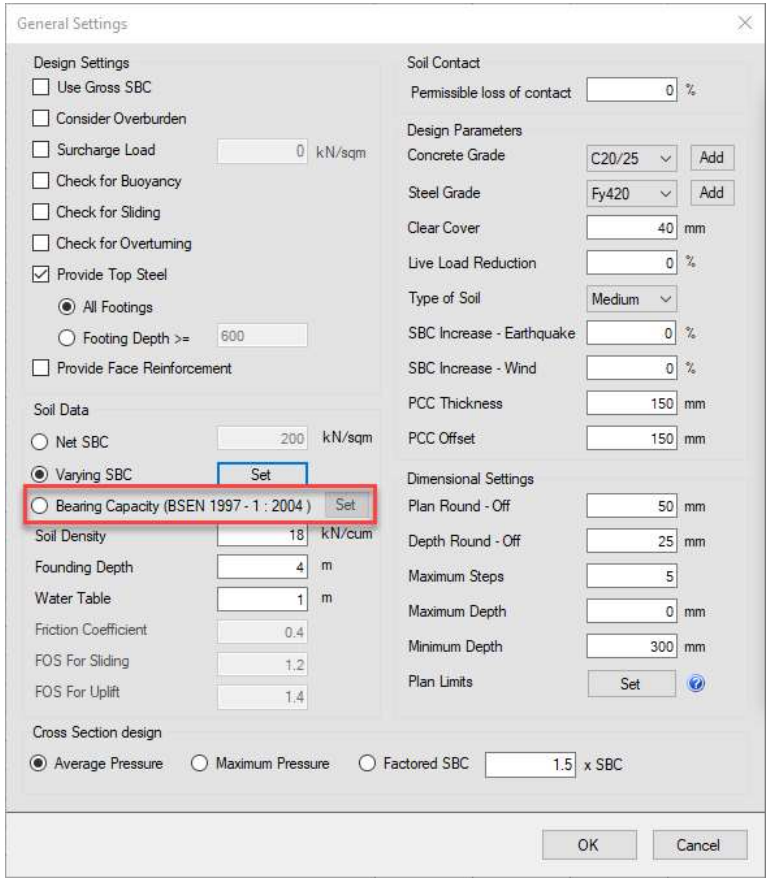

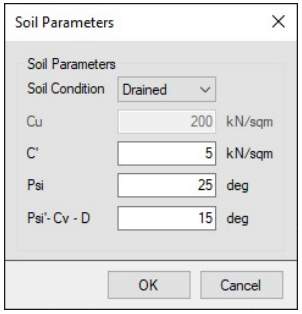

Check For Critical Bearing Resistance:

Critical Load Combination	=	[5] : (LOAD 1: LOAD CASE 1) +(LOAD 2: LOAD CASE 2) EQ-Y)	
Vcomb	=	1195.826	kN
Load factor for DL	=	1	
V-total	=	Vcomb + Load factor * (Selfweight + Soil-weight)	
	=	1278.845	kN
Mx	=	16.821	kN
My	=	164.803	kN
Shear Px	=	62.371	kN
Shear Py	=	12.864	kN

Calculation of Effective Area:

H-res	=	63.684
Elx	=	0.129
Ely	=	0.013
B'	=	1.274
L'	=	1.042
A'	=	1.328

 © 2019 Bentley Systems, Incorporated

Bentley

Footing

Crack-width

Footing No	Size (LxBxD)	Material	Location	Load Combination	Stress In Bar N/sqmm	Crack Width mm	Initial Crack Width mm
FC1	2850 x 2850 x 450	C20/25:Fy420	Bottom @ L	10001	181.36	0.1826	0.1223
			Bottom @ B	10001	179.31	0.1991	0.1182
			Top @ L		-	-	0.1994
			Top @ B		-	-	0.1994
FC2	3300 x 3300 x 575	C20/25:Fy420	Bottom @ L	10001	179.73	0.1937	0.1283
			Bottom @ B	10001	157.02	0.1915	0.1062
			Top @ L		-	-	0.1986
			Top @ B		-	-	0.1986
FC3	3250 x 3250 x 575	C20/25:Fy420	Bottom @ L	10001	175.35	0.1872	0.1263
			Bottom @ B	10001	152.89	0.1848	0.1046
			Top @ L		-	-	0.1956
			Top @ B		-	-	0.1956
FC4	3250 x 3250 x 575	C20/25:Fy420	Bottom @ L	10001	176.72	0.1886	0.1263
			Bottom @ B	10001	153.83	0.1859	0.1046
			Top @ L		-	-	0.1956
			Top @ B		-	-	0.1956

Stress Limit Check as per EN 02 - 2004

	Bottom Along L	Bottom Along B
Critical Load Combination	10001	10001
BM (Unfactored) (kNm)	415.26	420.96
Cmin (mm))	40	56
Reinforcement	T16 @ 145	T16 @ 120
Ast Prv (sqmm)	4825.49	5830.8
Check for Stress in Steel		
σ_{os} (N/sqmm)	179.73	157.02
$\sigma_{os,Perm}$ (N/sqmm)	336	336
Check for Stress in Concrete		
Fc (N/sqmm)	3.64	3.61
FcPerm (N/sqmm)	9	9

 © 2019 Bentley Systems, Incorporated

Pile-cap

Design- Pile capacities- Multiple

Pile Capacity

	Pile Diameter (Ø)	Compression Capacity (kN)			Tension Capacity (kN)			Shear Capacity (kN)		
		Set A1	Set A2	Set A3	Set A1	Set A2	Set A3	Set A1	Set A2	Set A3
☑	600	1000			200					
☐										

○ Single Capacity ◉ Multiple Capacities (Set A1,Set A2,Set A3)

OK Cancel

Load Combinations

Design Sizing

Analysis No		Type	LOAD 1: LOAD CASE (TDL)	LOAD 2: LOAD CASE (LL)	LOAD 3: LOAD CASE (EQX)	LOAD 4: LOAD CASE (EQZ)
	☑	Set A1	1	1		
	☑	Set A1	1	1	1	
	☑	Set A2	1	1	-1	
	☑	Set A3	1	1		1
	☑	Set A1	1	1		-1
	☑	Set A1	1		1	
	☑	Set A1	1		-1	
	☑	Set A1	1			1
	☑	Set A1	1			-1

(LOAD 1: LOAD CASE (TDL)) +(LOAD 2: LOAD CASE (LL))

View / Edit Template Add from Template Add from Analysis

Export Load Cases & Combinations OK Cancel

 © 2019 Bentley Systems, Incorporated

Bentley

Slab

Design

Design Moments:

Short Span Positive Moment At Midspan -			
Moment Coefficient, M1	=	0.094	
Mu (M1 x TL(ultimate) x Lx x Lx)	=	1.357	
Area Of Reinforcement Required (BM)	=	102.630	
Reinforcement Provided	=	T8 @ 225 C/C	
	=	223.000	
Short Span Negative Moment At Continuous Support -			
Moment Coefficient, M2	=	N.A.	
Mu (M2 x TL(ultimate) x Lx x Lx)	=	N.A.	
Area Of Reinforcement Required (BM)	=	N.A.	
Reinforcement Provided	=	N.A.	
	=	N.A.	
Long Span Positive Moment At Midspan -			
Moment Coefficient, M3	=	0.056	
Mu (M3 x TL(ultimate) x Ly x Ly)	=	0.807	
Area Of Reinforcement Required (BM)	=	102.630	
Reinforcement Provided	=	T8 @ 225 C/C	
	=	223.000	
Long Span Negative Moment At Continuous Support -			
Moment Coefficient, M4	=	N.A.	
Mu (M4 x TL(ultimate) x Ly x Ly)	=	N.A.	kNm
Area Of Reinforcement Required (BM)	=	N.A.	sqmm/m
Reinforcement Provided	=	N.A.	
	=	N.A.	sqmm/m
Distribution Reinforcement @ 0.13% -			
Area Of Reinforcement Required	=	97.500	sqmm/m
Reinforcement Provided	=	T8 @ 225 C/C	
	=	223.000	sqmm/m

Shear Check :

Along Short Span				
		=	0.455	
	Shear Coefficient, SF1	=	5.200	kN
	Vsx (SF1 x TL(ultimate) x Lx)	=	0.069	N/sqmm
	Shear Stress, Tv	=	0.443	N/sqmm
	Nominal Shear Stress, Tc	>	0.070	Slab Is Safe In Shear
Along Long Span				
		=	0.330	
	Shear Coefficient, SF2	=	3.773	kN
	Vsy (SF2 x TL(ultimate) x Ly)	=	0.058	N/sqmm
	Shear Stress, Tv	=	0.443	N/sqmm
	Nominal Shear Stress, Tc	>	0.060	Slab Is Safe In Shear

Deflection Check:

	=	0.004	
ρ_o	=	0.298	
ρ	=	26.152	
Basic Span To Depth Ratio	=	1.000	
F_1	=	1.000	
F_2	=	1.190	
F_3	=	26.152 x 1.000 x 1.000 x 1.190	
Max Span To Depth Ratio	=	31.133	
	=	16.800	
Lx/d	<	31.133	Slab Is Safe In Deflection

 © 2019 Bentley Systems, Incorporated

Bentley

Thank You

 © 2019 Bentley Systems, Incorporated

Bentley