# 1 FOUNDATION IN OVERCONSOLIDATED CLAY

In this chapter a first application of PLAXIS 3D is considered, namely the settlement of a foundation in clay. This is the first step in becoming familiar with the practical use of the program.

The general procedures for the creation of a geometry, the generation of a finite element mesh, the execution of a finite element calculation and the evaluation of the output results are described here in detail. The information provided in this tutorial will be utilised in the following tutorials. Therefore, it is important to complete this first tutorial before attempting any further tutorial examples.

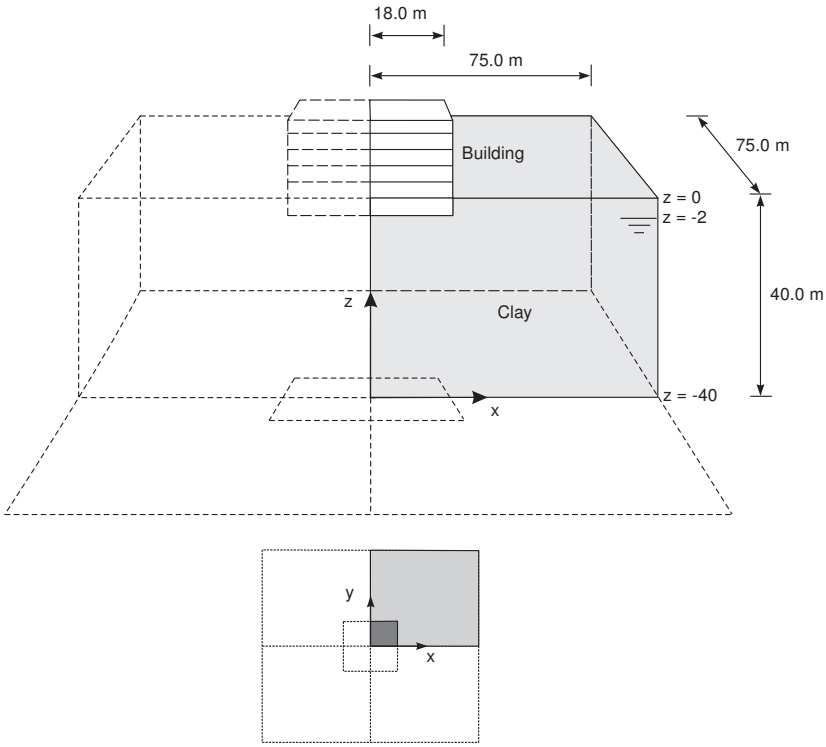


Figure 1.1 Geometry of a square building on a raft foundation

## GEOMETRY

This exercise deals with the construction and loading of a foundation of a square building in a lightly overconsolidated lacustrine clay. Below the clay layer there is a stiff rock layer that forms a natural boundary for the considered geometry. The rock layer is not included in the geometry; instead an appropriate boundary condition is applied at the bottom of the clay layer. The purpose of the exercise is to find the settlement of the foundation.

The building consists of a basement level and 5 floors above the ground level (Figure 1.1). To reduce calculation time, only one-quarter of the building is modelled, using symmetry boundary conditions along the lines of symmetry. To enable any possible

mechanism in the clay and to avoid any influence of the outer boundary, the model is extended in both horizontal directions to a total width of 75 m.

The model is considered in three different cases:

**Case A:** The building is considered very stiff and rough. The basement is simulated by means of non-porous linear elastic volume elements.

**Case B:** The structural forces are modelled as loads on a raft foundation.

**Case C:** Embedded beams are included in the model to reduce settlements.

## 1.1 CASE A: RIGID FOUNDATION

In this case, the building is considered to be very stiff. The basement is simulated by means of non-porous linear elastic volume elements. The total weight of the basement corresponds to the total permanent and variable load of the building. This approach leads to a very simple model and is therefore used as a first exercise, but it has some disadvantages. For example it does not give any information about the structural forces in the foundation.

Objectives:

- Starting a new project.
- Creation of soil stratigraphy using a single borehole.
- Creation of material data sets.
- Creation of volumes using *Create surface* and *Extrude* tools.
- Assigning material.
- Local mesh refinement.
- Generation of mesh.
- Generating initial stresses using the $K_0$ *procedure*.
- Defining a *Plastic* calculation.

### 1.1.1 GEOMETRY INPUT

- Start the PLAXIS 3D program. The *Quick select* dialog box will appear in which you can select an existing project or create a new one (Figure 1.2).
- Click *Start a new project*. The *Project properties* window appears, consisting of *Project* and *Model* tabsheets.

#### *Project properties*

The first step in every analysis is to set the basic parameters of the finite element model. This is done in the *Project properties* window. These properties include the description of the problem, the basic units and the size of the drawing area.

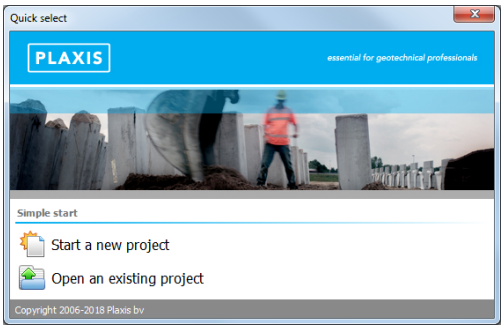


Figure 1.2 *Quick select* dialog box

To enter the appropriate properties for the foundation calculation follow these steps:

- In the *Project* tabsheet, enter "Tutorial 1" as the *Title* of the project and type "Settlements of a foundation" in the *Comments* box (Figure 1.3).

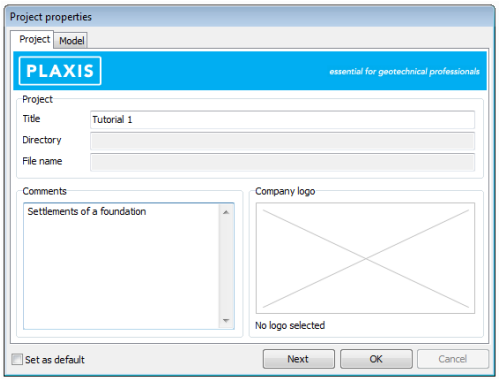


Figure 1.3 *Project* tabsheet of the *Project properties* window

- Proceed to the *Model* tabsheet by clicking either the *Next* button or the *Model* tab (Figure 1.4).
- Keep the default units in the *Units* box (Length = *m*; Force = *kN*; Time = *day*).
- The *General* box indicates a fixed gravity of 1.0 G, in the vertical downward direction (-z).
- In the $\gamma_{water}$ box the unit weight of water can be defined. Keep this to the default value of 10 kN/m$^3$.
- Define the limits for the soil contour as $x_{min}$ = 0, $x_{max}$ = 75, $y_{min}$ = 0 and $y_{max}$ = 75 in the *Contour* group box.
- Click the *OK* button to confirm the settings.

**Hint:** In case of a mistake or for any other reason that the project properties need to be changed, you can access the *Project properties* window by selecting the corresponding option in the *File* menu.

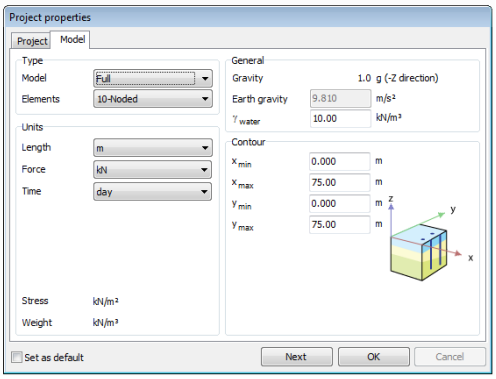


Figure 1.4 *Model* tabsheet of the *Project properties* window

### *Definition of soil stratigraphy*

When you click the *OK* button the *Project properties* window will close and the *Soil* mode view will be shown. Information on the soil layers is entered in boreholes.

Boreholes are locations in the drawing area at which the information on the position of soil layers and the water table is given. If multiple boreholes are defined, PLAXIS 3D will automatically interpolate between the boreholes, and derive the position of the soil layers from the borehole information.

**Hint:** PLAXIS 3D can also deal with layers that are discontinuous, i.e. only locally present in the model area. See Section 4.2.2 of the Reference Manual for more information.

In the current example, only one soil layer is present, and only a single borehole is needed to define the soil stratigraphy. In order to define the borehole, follow these steps:

- Click the *Create borehole* button in the side toolbar to start defining the soil stratigraphy. Click on position (0 0 0) in the geometry. A borehole will be located at $(x, y) = (0\ 0)$. The *Modify soil layers* window will appear.
- In the *Modify soil layers* window add a soil layer by clicking on the *Add* button. Keep the top boundary of the soil layer at $z = 0$ and set the bottom boundary to $z = -40$ m.
- Set the *Head* value in the borehole column to $-2$ m (Figure 1.5).

The creation of material data sets and their assignment to soil layers is described in the following section.

## 1.1.2 MATERIAL DATA SETS

In order to simulate the behaviour of the soil, a suitable material model and appropriate material parameters must be assigned to the geometry. In PLAXIS soil properties are collected in material data sets and the various data sets are stored in a material database. From the database, a data set can be assigned to one or more clusters. For structures (like beams, plates, etc.) the system is similar, but different types of structures

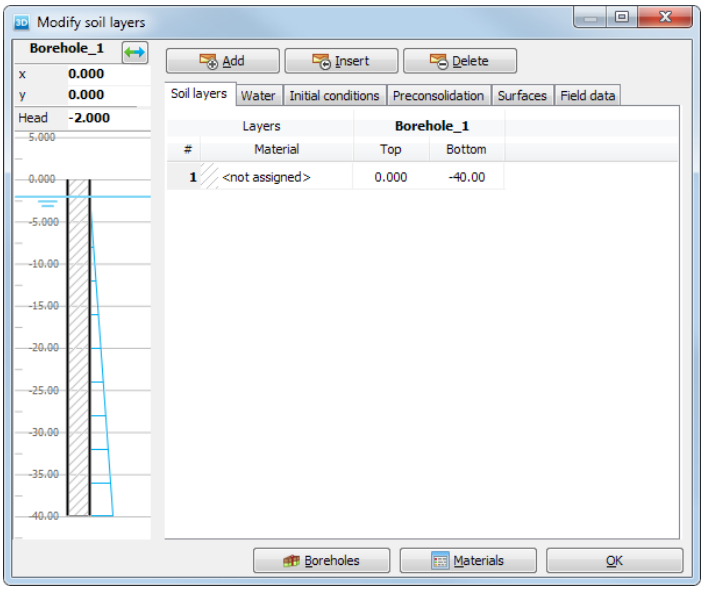


Figure 1.5 *Modify soil layers* window

have different parameters and therefore different types of data sets.

PLAXIS 3D distinguishes between material data sets for *Soils and interfaces*, *Plates*, *Geogrids*, *Beams*, *Embedded beams* and *Anchors*.

Open the *Material sets* window by clicking the *Materials* button in the *Modify soil layers* window.

**Hint:** In the case that the *Modify soil layers* window was closed by mistake, it can be re-opened by double-clicking the borehole in the drawing area or by selecting the *Modify soil layers* option from the *Soil* menu.

- Click the *New* button in the lower part of the *Material sets* window. The *Soil* window will appear. It contains five tabsheets: *General*, *Parameters*, *Groundwater*, *Interfaces* and *Initial*.
- In the *Material set* box of the *General* tabsheet (Figure 1.6), write "Lacustrine Clay" in the *Identification* box.
- Select *Mohr-Coulomb* as the material model from the *Material model* drop-down menu and *Drained* from the *Drainage type* drop-down menu.
- Enter the unit weights in the *General properties* box according to the material data as listed in Table 1.1. Keep the unmentioned *Advanced parameters* as their default values.

**Hint:** To understand why a particular soil model has been chosen, see Appendix B of the Material Models Manual.

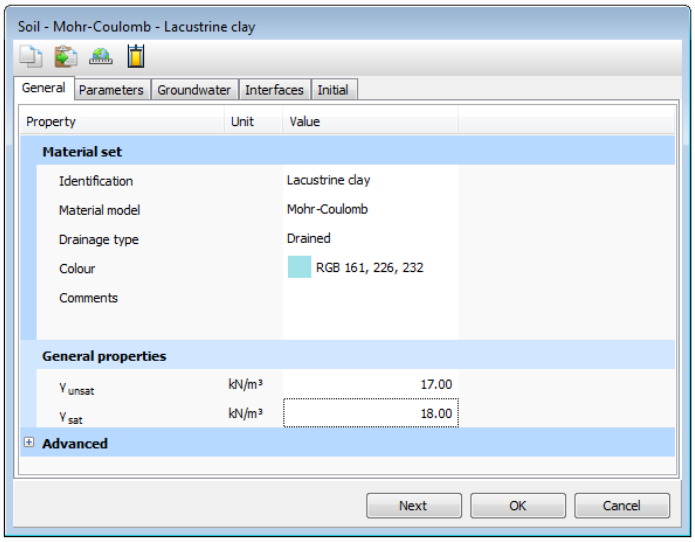


Figure 1.6 *General* tabsheet of the *Soil and interfaces* data set window

Table 1.1 Material properties

| Parameter | Name | Lacustrine clay | Building | Unit |
|---|---|---|---|---|
| General | | | | |
| Material model | Model | Mohr-Coulomb | Linear elastic | – |
| Drainage type | Type | Drained | Non-porous | – |
| Unit weight above phreatic level | $\gamma_{unsat}$ | 17.0 | 50 | $kN/m^3$ |
| Unit weight below phreatic level | $\gamma_{sat}$ | 18.0 | – | $kN/m^3$ |
| Parameters | | | | |
| Young's modulus (constant) | $E'$ | $1 \cdot 10^4$ | $3 \cdot 10^7$ | $kN/m^2$ |
| Poisson's ratio | $\nu'$ | 0.3 | 0.15 | – |
| Cohesion (constant) | $c'_{ref}$ | 10 | – | $kN/m^2$ |
| Friction angle | $\varphi'$ | 30.0 | – | ° |
| Dilatancy angle | $\psi$ | 0.0 | – | ° |
| Initial | | | | |
| $K_0$ determination | – | Automatic | Automatic | – |
| Lateral earth pressure coefficient | $K_0$ | 0.5000 | 0.5000 | – |

- Click the *Next* button or click the *Parameters* tab to proceed with the input of model parameters. The parameters appearing on the *Parameters* tabsheet depend on the selected material model (in this case the Mohr-Coulomb model). The Mohr-Coulomb model involves only five basic parameters ($E'$, $\nu'$, $c'$, $\varphi'$, $\psi'$). See the Material Models Manual for a detailed description of the different soil models and their corresponding parameters.
- Enter the model parameters $E'$, $\nu'$, $c'_{ref}$, $\varphi'$ and $\psi$ of *Lacustrine clay* according to Table 1.1 in the corresponding boxes of the *Parameters* tabsheet (Figure 1.7).
- No consolidation will be considered in this exercise. As a result, the permeability of the soil will not influence the results and the *Groundwater* window can be skipped.
- Since the geometry model does not include interfaces, the *Interfaces* tab can be skipped.
- Click the *Initial* tab and check that the $K_0$ *determination* is set to *Automatic*. In that

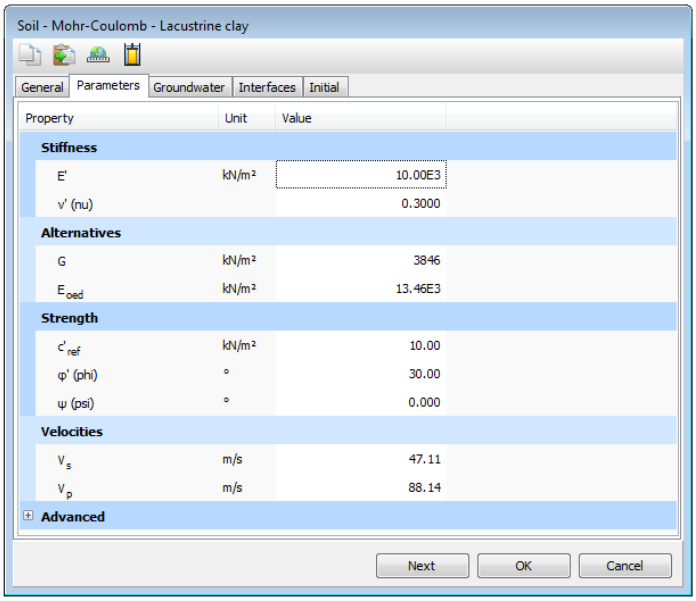


Figure 1.7 *Parameters* tabsheet of the *Soil and interfaces* data set window

case $K_0$ is determined from Jaky's formula: $K_0 = 1 - \sin\varphi$.

- Click the *OK* button to confirm the input of the current material data set. The created data set appears in the tree view of the *Material sets* window.
- Drag the set *Lacustrine clay* from the *Material sets* window (select it and hold down the left mouse button while moving) to the graph of the soil column on the left hand side of the *Modify soil layers* window and drop it there (release the left mouse button).

**Hint:** Notice that the cursor changes shape to indicate whether or not it is possible to drop the data set. Correct assignment of the data set to the soil layer is indicated by a change in the colour of the layer.

The building is modelled by a linear elastic non-porous material. To define this data set, follow these steps:

- Click the *New* button in the *Material sets* window.
- In the *Material set* box of the *General* tabsheet, write "Building" in the *Identification* box.
- Select *Linear elastic* as the material model from the *Material model* drop-down menu and *Non-porous* from the *Drainage type* drop-down menu.
- Enter the unit weight in the *General properties* box according to the material data set as listed in Table 1.1. This unit weight corresponds to the total permanent and variable load of the building.
- Click the *Next* button or click the *Parameters* tab to proceed with the input of the

model parameters. The linear elastic model involves only two basic parameters ($E'$, $\nu'$).

- Enter the model parameters of Table 1.1 in the corresponding edit boxes of the *Parameters* tabsheet.
- Click the *OK* button to confirm the input of the current material data set. The created data set will appear in the tree view of the *Material sets* window, but it is not directly used.
- Click the *OK* button to close the *Material sets* window.
- Click the *OK* button to close the *Modify soil layers* window.

**Hint:** PLAXIS 3D distinguishes between a project database and a global database of material sets. Data sets may be exchanged from one project to another using the global database. The global database can be shown in the *Material sets* window by clicking the *Show global* button. The data sets of all tutorials in the Tutorial Manual are stored in the global database during the installation of the program.

### 1.1.3 DEFINITION OF STRUCTURAL ELEMENTS

The structural elements are created in the *Structures* mode of the program. Click the *Structures* button to proceed with the input of structural elements. To model the building:

- Click the *Create surface* button. Position the cursor at the coordinate (0 0 0). Check the cursor position displayed in the cursor position indicator. As you click, the first surface point of the surface is defined.
- Define three other points with coordinates (0 18 0), (18 18 0), (18 0 0) respectively. Press the right mouse button or *Esc* to finalize the definition of the surface. Note that the created surface is still selected and displayed in red.
- Click the *Extrude object* button to create a volume from the surface.
- Change the *z* value to -2 in the *Extrude* window (Figure 1.8). Click the *Apply* button to close the window.

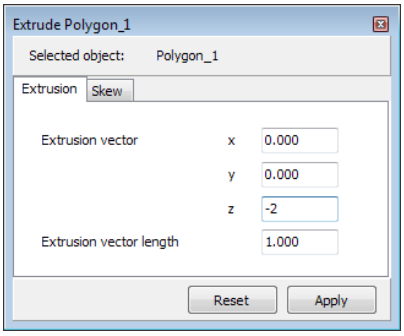


Figure 1.8 *Extrude* window

Click the *Select* button. Select the created surface using the right mouse button. Select *Delete* from the appearing menu. This will delete the surface but the building volume is retained.

The building volume, as well as the corresponding material data sets have now been created.

### 1.1.4 MESH GENERATION

The model is complete. In order to proceed to the *Mesh* mode click the *Mesh* tab. PLAXIS 3D allows for a fully automatic mesh generation procedure, in which the geometry is divided into volume elements and compatible structure elements, if applicable. The mesh generation takes full account of the position of the geometry entities in the geometry model, so that the exact position of layers, loads and structures is accounted for in the finite element mesh. A local refinement will be considered in the building volume. To generate the mesh, follow these steps:

Click the *Refine mesh* button in the side toolbar and click the created building volume to refine the mesh locally. It will colour green.

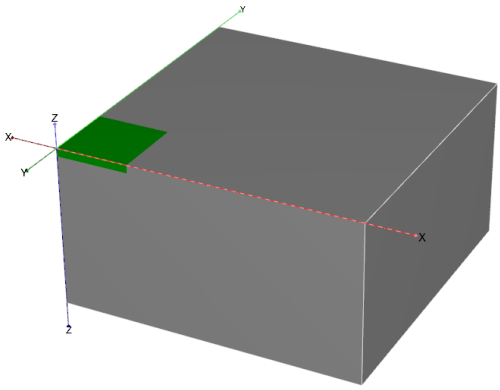


Figure 1.9 The indication of the local refinement in the model

Click the *Generate mesh* button in the side toolbar or select the *Generate mesh* option in the *Mesh* menu. Change the *Element distribution* to *Coarse* in the *Mesh options* window (Figure 1.10) and click *OK* to start the mesh generation.

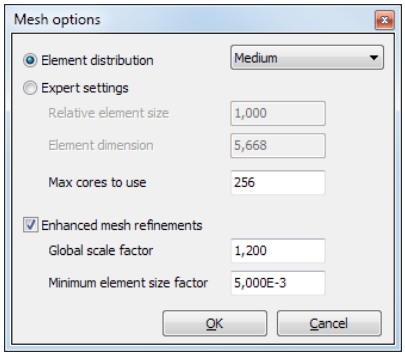


Figure 1.10 *Mesh options* window

After the mesh is generated, click the *View mesh* button. A new window is opened displaying the generated mesh (Figure 1.11).

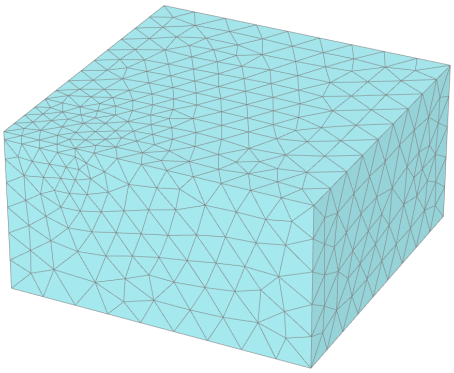

Figure 1.11 Generated mesh in the *Output* window

- Click on the *Close* tab to close the Output program and go back to the *Mesh* mode of the *Input* program.

**Hint:** By default, the *Element distribution* is set to *Medium*. The *Element distribution* setting can be changed in the *Mesh options* window. In addition, options are available to refine the mesh globally or locally (Section 7.1 of Reference Manual).

» The finite element mesh has to be regenerated if the geometry is modified.

» The automatically generated mesh may not be perfectly suitable for the intended calculation. Therefore it is recommended that the user inspects the mesh and makes refinements if necessary.

### 1.1.5 PERFORMING CALCULATIONS

Once the mesh has been generated, the finite element model is complete. Click *Staged construction* to proceed with the definition of calculation phases.

#### *Initial conditions*

The 'Initial phase' always involves the generation of initial conditions. In general, the initial conditions comprise the initial geometry configuration and the initial stress state, i.e. effective stresses, pore pressures and state parameters, if applicable. The initial water level has been entered already in the *Modify soil layers* window. This level is taken into account to calculate the initial effective stress state. It is therefore not needed to enter the *Flow conditions* mode.

When a new project has been defined, a first calculation phase named "Initial phase", is automatically created and selected in the *Phases explorer* (Figure 1.12). All structural elements and loads that are present in the geometry are initially automatically switched off; only the soil volumes are initially active.

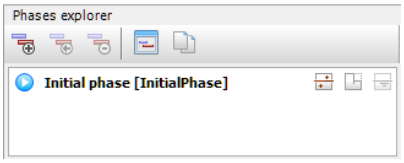


Figure 1.12 *Phases explorer*

In this tutorial lesson the properties of the *Initial phase* will be described. This part of the tutorial gives an overview of the options to be defined even though the default values of the parameters are used.

The *Phases* window (Figure 1.13) is displayed by clicking the *Edit phase* button or by double clicking on the phase in the *Phases explorer*.

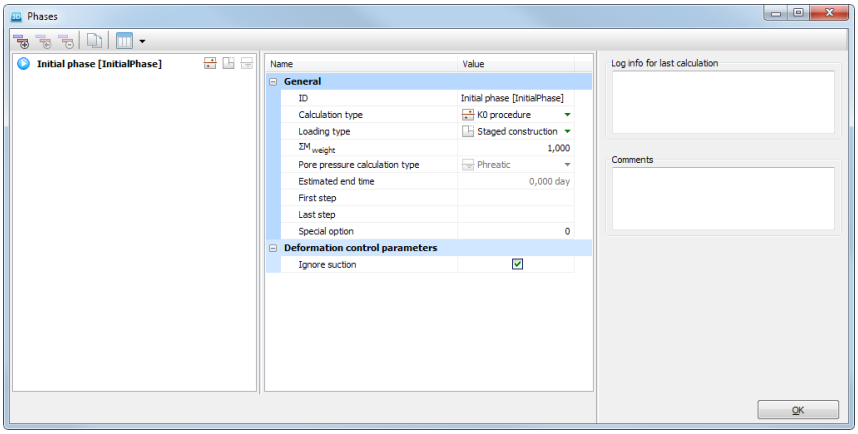


Figure 1.13 The *Phases* window for *Initial phase*

By default the *K0 procedure* is selected as *Calculation type* in the *General* subtree of the *Phases window*. This option will be used in this project to generate the initial stresses.

The *Staged construction* option is selected as the *Loading type*. This is the only option available for the *K0 procedure*.

The *Phreatic* option is selected by default as the *Pore pressure calculation type*.

- The other default options in the *Phases* window will be used as well in this tutorial. Click *OK* to close the *Phases* window.
- In the *Model explorer* expand the *Model conditions* subtree.
- Expand the *Water* subtree. The water level generated according to the *Head* value assigned to boreholes in the *Modify soil layers* window (BoreholeWaterLevel_1) is automatically assigned to *GlobalWaterLevel*.
- Make sure that all the soil volumes in the project are active and the material assigned to them is *Lacustrine clay*.

**Hint:** The *K0 procedure* may only be used for horizontally layered geometries with a horizontal ground surface and, if applicable, a horizontal phreatic level. See Section 7.3 of the Reference Manual for more information on the *K0 procedure*.

### *Construction stage*

After the definition of the initial conditions, the construction of the building can be modelled. This will be done in a separate calculation phase, which needs to be added as follows:

- Click the *Add* button in the *Phases explorer*. A new phase, named *Phase_1* will be added in the *Phases explorer*.
- Double-click *Phase_1* to open the *Phases* window.
- In the *ID* box of the *General* subtree, write (optionally) an appropriate name for the new phase (for example "Building").
- The current phase starts from *Initial phase*, which contains the initial stress state. The default options and values assigned are valid for this phase (Figure 1.14).

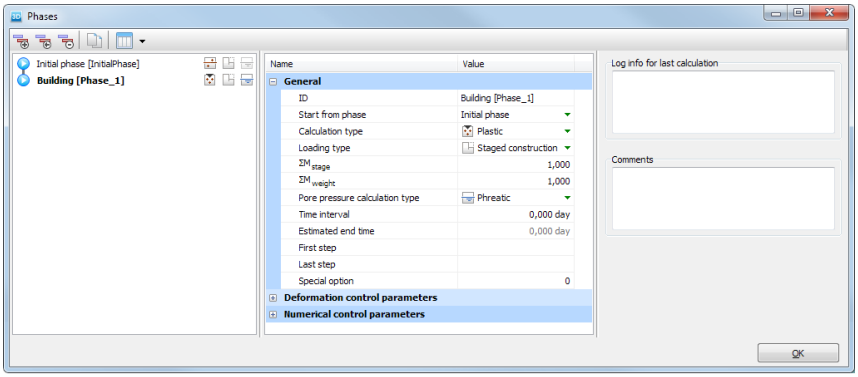


Figure 1.14 The *Phases* window for *Building* phase

- Click *OK* to close the *Phases* window.
- Right-click the building volume as created in Section 1.1.3. From the *Set material* option in the appearing menu select the *Building* option. The 'Building' data set has now been assigned to the building volume.

**Hint:** Calculation phases may be added, inserted or deleted using the *Add*, *Insert* and *Delete* buttons in the *Phases explorer* or in the *Phases* window.

### *Execution of calculation*

All calculation phases (two phases in this case) are marked for calculation (indicated by a blue arrow). The execution order is controlled by the *Start from phase* parameter.

Click the *Calculate* button to start the calculation process. Ignore the warning that no nodes and stress points have been selected for curves. During the execution of a calculation, a window appears which gives information about the progress of the actual calculation phase (Figure 1.15).

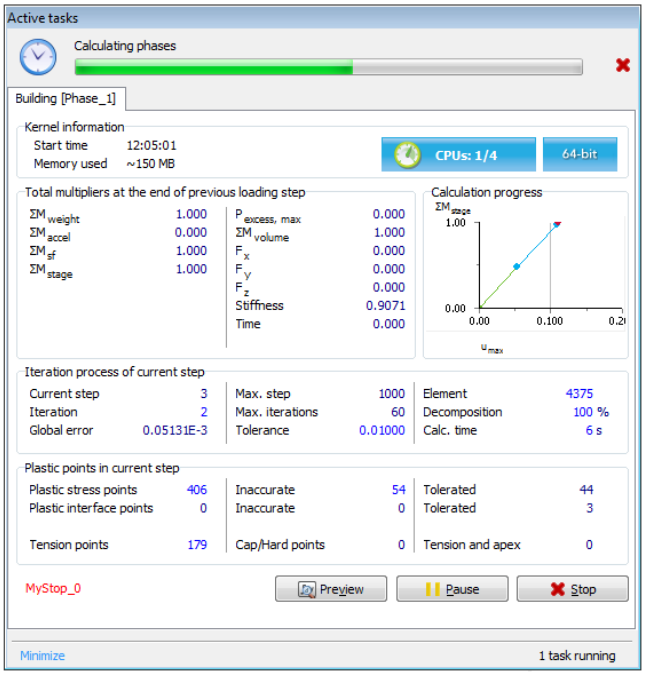


Figure 1.15 *Active task* window displaying the calculation progress

The information, which is continuously updated, shows, amongst others, the calculation progress, the current step number, the global error in the current iteration and the number of plastic points in the current calculation step. It will take a few seconds to perform the calculation. When a calculation ends, the window is closed and focus is returned to the main window.

The phase list in the *Phases explorer* is updated. A successfully calculated phase is indicated by a check mark inside a green circle.

Save the project before viewing results.

### *Viewing calculation results*

Once the calculation has been completed, the results can be displayed in the *Output* program. In the *Output* program, the displacement and stresses in the full three-dimensional model as well as in cross sections or structural elements can be viewed. The computational results are also available in tabular form. To view the current results, follow these steps:

- Select the last calculation phase (*Building*) in the *Phases explorer* tree.

Click the *View calculation results* button in the side toolbar to open the *Output* program. The *Output* program will, by default, show the three-dimensional deformed

mesh at the end of the selected calculation phase. The deformations are scaled to ensure that they are clearly visible.

- Select *Total Displacements* → $|u|$ from the *Deformations* menu. The plot shows colour shadings of the total displacements (Figure 1.16).
- A legend is presented with the displacement values at the colour boundaries. When the legend is not present, select the *Legend* option from the *View* menu to display it.

In the *Output* window click the *Iso surfaces* button to display the areas having the same displacement.

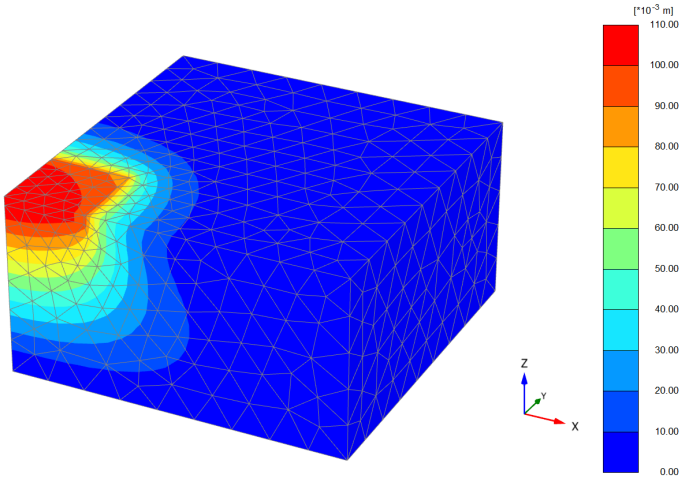


Figure 1.16 Shadings of *Total displacements* at the end of the last phase

**Hint:** In addition to the *Total displacements*, the *Deformations* menu allows for the presentation of *Incremental displacements* and *Phase displacements*.

» The incremental displacements are the displacements that occurred in one calculation step (in this case the final step). Incremental displacements may be helpful in visualising failure mechanisms.

» Phase displacements are the displacements that occurred in one calculation phase (in this case the last phase). Phase displacements can be used to inspect the impact of a single construction phase, without the need to reset displacements to zero before starting the phase.

## 1.2 CASE B: RAFT FOUNDATION

In this case, the model is modified so that the basement consists of structural elements. This allows for the calculation of structural forces in the foundation. The raft foundation consists of a 50 cm thick concrete floor stiffened by concrete beams. The walls of the basement consist of 30 cm thick concrete. The loads of the upper floors are transferred to the floor slab by a column and by the basement walls. The column bears a load of 11650 kN and the walls carry a line load of 385 kN/m, as sketched in Figure 1.17.

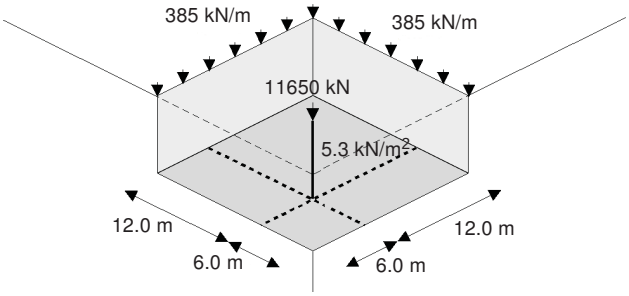


Figure 1.17 Geometry of the basement

In addition, the floor slab is loaded by a distributed load of 5.3 kN/m$^2$. The properties of the clay layer will be modified such that stiffness of the clay will increase with depth.

Objectives:

- Saving project under a different name.
- Modifying existing data sets.
- Defining a soil stiffness that increases with depth.
- Modelling of plates and defining material data set for plates.
- Modelling of beams and defining material data set for beams.
- Assigning point loads.
- Assigning line loads.
- Assigning distributed loads to surfaces.
- Deleting phases.
- Activation and deactivation of soil volumes.
- Activation and deactivation of structural elements.
- Activation of loads.
- Zooming in Output.
- Drawing cross sections in Output.
- Viewing structural output.

### *Geometry input*

The geometry used in this exercise is the same as the previous one, except that additional elements are used to model the foundation. It is not necessary to create a new model; you can start from the previous model, store it under a different name and modify it. To perform this, follow these steps:

- Start the PLAXIS 3D program. The *Quick select* dialog box will appear in which the project of case A should be selected.
- Select the *Save project as* option in the *File* menu to save the project under a different name (e.g. "Tutorial 1b").

The material set for the clay layer has already been defined. To modify this material set to take into account the stiffness of the soil increasing with depth, follow these steps:

- Open the *Material sets* window by clicking the *Show materials* button.
- Make sure that the option *Soil and interfaces* is selected as *Set type*.
- Select the *Lacustrine clay* material set and click the *Edit* button.
- In the *Parameters* tabsheet, change the stiffness of the soil $E'$ to 5000 kN/m$^2$.
- Enter a value of 500 in the $E'_{inc}$ box in the *Advanced* parameters. Keep the default value of 0.0 m for $z_{ref}$. Now the stiffness of the soil is defined as 5000 kN/m$^2$ at $z$ = 0.0 m and increases with 500 kN/m$^2$ per meter depth.
- Click *OK* to close the *Soil* window.
- Click *OK* to close the *Material sets* window.

### *Definition of structural elements*

Proceed to the *Structures* mode to define the structural elements that compose the basement.

- Click the *Selection* button.
- Right-click the volume representing the building. Select the *Decompose into surfaces* option from the appearing menu.
- Delete the top surface by selecting it and pressing the *Delete* key.
- Select the volume representing the building. Click the visualisation toggle in the *Selection explorer* to hide the volume.
- Right-click the bottom surface of the building. Select the *Create plate* option from the appearing menu.
- Assign plates to the two vertical basement surfaces that are inside the model. Delete the remaining two vertical surfaces at the model boundaries.

> **Hint:** Multiple entities can be selected by holding the *Ctrl* button pressed while clicking on the entities.
> A feature can be assigned to multiple similar objects the same way as to a single selection.

- Open the material data base and set the *Set type* to *Plates*.
- Create data sets for the basement floor and for the basement walls according to Table 1.2.
- Drag and drop the data sets to the basement floor and the basement walls accordingly. It may be needed to move the *Material sets* window by clicking at its header and dragging it.
- Click the *OK* button to close the *Material sets* window.
- Right-click the bottom of the surface of the building volume and select the *Create surface load* option from the appearing menu. The actual value of the load can be

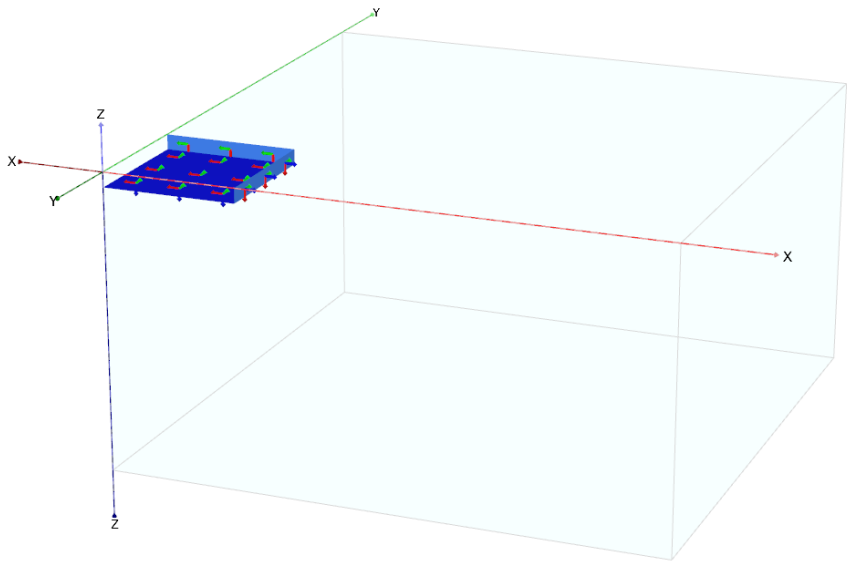


Figure 1.18 Location of plates in the project

Table 1.2 Material properties of the basement floor and basement walls

| Parameter | Name | Basement floor | Basement wall | Unit |
|---|---|---|---|---|
| Type of behaviour | Type | Elastic, isotropic | Elastic, isotropic | — |
| Thickness | $d$ | 0.5 | 0.3 | $m$ |
| Weight | $\gamma$ | 15 | 15.5 | $kN/m^3$ |
| Young's modulus | $E_1$ | $3 \cdot 10^7$ | $3 \cdot 10^7$ | $kN/m^2$ |
| Poisson's ratio | $\nu_{12}$ | 0.15 | 0.15 | — |

**Hint:** When specifying a unit weight, please consider the fact that the element itself does not occupy any volume and overlaps with the soil elements. Hence, it might be considered to subtract the unit soil weight from the real unit weight of the plate, beam or embedded beam material in order to compensate for the overlap. For partially overlapping plates, beams or embedded beams the reduction of the unit weight should be proportional.

assigned in the *Structures* mode as well as when the calculation phases will be defined (*Phase definition* mode). In this example, the value will be assigned in the *Phase definition* modes.

- Click the *Create line* button in the side toolbar.
- Select the *Create line load* option from the additional tools displayed.
- Click the command input area, type "0 18 0 18 18 0 18 0 0 " and press *Enter*. Line loads will now be defined on the basement walls. The defined values are the coordinates of the three points of the lines. Click the right mouse button to stop drawing line loads.
- Click the *Create line* button in the side toolbar.
- Select the *Create beam* option from the additional tools displayed.

- Click on (6 6 0) to create the first point of a vertical beam. Keep the *Shift* key pressed and move the mouse cursor to (6 6 -2). Note that while the *Shift* key is pressed the cursor will move only vertically. As it can be seen in the cursor position indicator, the *z* coordinate changes, while *x* and *y* coordinates will remain the same. Click on (6 6 -2) to define the second point of the beam. To stop drawing click the right mouse button.
- Create horizontal beams from (0 6 -2) to (18 6 -2) and from (6 0 -2) to (6 18 -2).

**Hint:** By default, the cursor is located at z=0. To move in the vertical direction, keep the *Shift* key pressed while moving the mouse.

Open the material data base and set the *Set type* to *Beams*.

- Create data sets for the horizontal and for the vertical beams according to Table 1.3. Assign the data set to the corresponding beam elements by drag and drop.

Table 1.3 Material properties of the basement column and basement beams

| Parameter | Name | Basement column | Basement beam | Unit |
|---|---|---|---|---|
| Material type | Type | Elastic | Elastic | – |
| Young's modulus | $E$ | $3 \cdot 10^7$ | $3 \cdot 10^7$ | $kN/m^2$ |
| Volumetric weight | $\gamma$ | 24.0 | 6.0 | $kN/m^3$ |
| Cross section area | $A$ | 0.49 | 0.7 | $m^2$ |
| Moment of Inertia | $I_2$ | 0.020 | 0.029 | $m^4$ |
| | $I_3$ | 0.020 | 0.058 | $m^4$ |

Click the *Create load* button in the side toolbar.

Select the *Create point load* option from the additional tools displayed. Click at (6 6 0) to add a point load at the top of the vertical beam.

Proceed to the *Mesh* tabsheet to generate the mesh.

### *Mesh generation*

Click the *Generate mesh*. Keep the *Element distribution* as *Coarse*.

Inspect the generated mesh.

- Click on the *Close* tab to close the Output program and go back to the *Mesh* mode of the *Input* program.

As the geometry has changed, all calculation phases have to be redefined.

## 1.2.1 PERFORMING CALCULATIONS

Proceed to the *Staged construction* mode.

### *Initial conditions*

As in the previous example, the $K_0$ procedure will be used to generate the initial conditions.

- All the structural elements should be inactive in the Initial Phase.

- No excavation is performed in the initial phase. So, the basement volume should be active and the material assigned to it should be *Lacustrine clay*.

### *Construction stages*

Instead of constructing the building in one calculation stage, separate calculation phases will be used. In Phase 1, the construction of the walls and the excavation is modelled. In Phase 2, the construction of the floor and beams is modelled. The activation of the loads is modelled in the last phase (Phase 3).

The calculation type for the phases representing the construction stages is set by default to *Plastic*.

- In the *Phases* window rename *Phase_1* to "Excavation".
- In the *Staged construction* mode deactivate the soil volume located over the foundation by selecting it and by clicking on the checkbox in front of it in the *Selection explorer*.
- In the *Model explorer* click the checkbox in front of the plates corresponding to the basement walls to activate them.

In the *Phases explorer* click the *Add phase* button. A new phase (Phase_2) is added. Double-click *Phase_2*. The *Phases* window pops up.

- Rename the phase by defining its *ID* as "Construction". Keep the default settings of the phase and close the *Phases* window.
- In the *Model explorer* click the checkbox in front of the plate corresponding to the basement floor to activate it.
- In the *Model explorer* click the checkbox in front of the beams to activate all the beams in the project.

Add a new phase following the *Construction* phase. Rename it to "Loading".

- In the *Model explorer* click the checkbox in front of the *Surface loads* to activate the surface load on the basement floor. Set the value of the *z*-component of the load to -5.3. This indicates a load of 5.3 kN/m$^2$, acting in the negative *z*-direction.
- In the *Model explorer*, click the checkbox in front of *Line loads* to activate the line loads on the basement walls. Set the value of the *z*-component of each load to -385. This indicates a load of 385 kN/m, acting in the negative *z*-direction.
- In the *Model explorer* click the checkbox in front of *Point loads* to activate the point load on the basement column. Set the value of the *z*-component of the load to -11650. This indicates a load of 11650 kN, acting in the negative *z*-direction.

Click the *Preview phase* button to check the settings for each phase.

As the calculation phases are completely defined, calculate the project. Ignore the warning that no nodes and stress points have been selected for curves.

Save the project after the calculation.

### *Viewing calculation results*

- Select *Construction* phase in the *Phases explorer*.

Click the *View calculation results* button to open the Output program. The deformed mesh at the end of this phase is shown.

- Select the last phase in the *Displayed step* drop-down menu to switch to the results at the end of the last phase.

In order to evaluate stresses and deformations inside the geometry, select the *Vertical cross section* tool. A top view of the geometry is presented and the *Cross section points* window appears. As the largest displacements appear under the column, a cross section here is most interesting.

- Enter (0.0 6.0) and (75.0 6.0) as the coordinates of the first point (A) and the second point (A') respectively in the *Cross section points* window.
- Click *OK*. A vertical cross section is presented. The cross section can be rotated in the same way as a regular $3D$ view of the geometry.
- Select *Total displacements* $\rightarrow u_z$ from the *Deformations* menu (Figure 1.19). The maximum and minimum values of the vertical displacements are shown in the caption. If the title is not visible, select this option from the *View* menu.

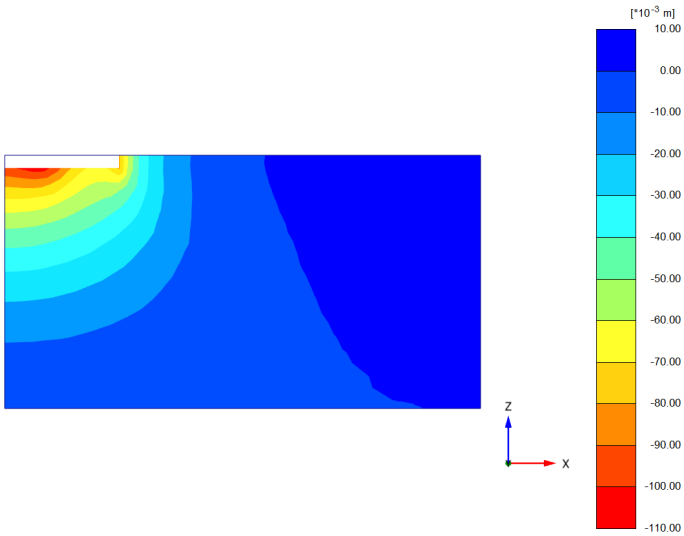


Figure 1.19 Cross section showing the total vertical displacement

- Press *CTRL*+ and *CTRL*− to move the cross section.
- Return to the three-dimensional view of the geometry by selecting this window from the list in the *Window* menu.
- Double-click the floor. A separate window will appear showing the displacements of the floor. To look at the bending moments in the floor, select $M_{11}$ from the *Forces* menu.

Click the *Shadings* button. The plot in Figure 1.20 will be displayed.

To view the bending moments in tabulated form, click the *Table* option in the *Tools* menu. A new window is opened in which a table is presented, showing the values of bending moments in each node of the floor.

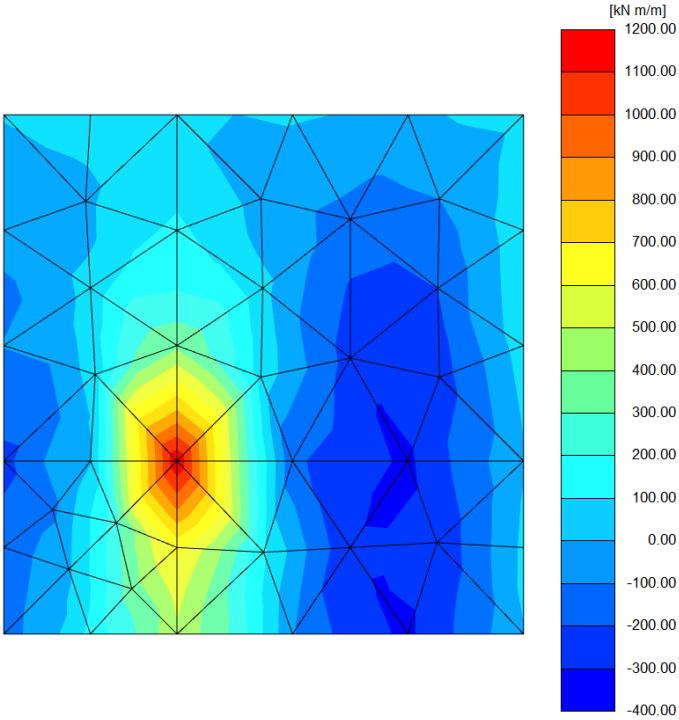


Figure 1.20 Bending moments in the basement floor

## 1.3 CASE C: PILE-RAFT FOUNDATION

As the displacements of the raft foundation are rather high, embedded beams will be used to decrease these displacements. These embedded beams represent bored piles with a length of 20 m and a diameter of 1.5 m.

Objectives:

- Using embedded beams.
- Defining material data set for embedded beams.
- Creating multiple copies of entities.

### *Geometry input*

The geometry used in this exercise is the same as the previous one, except for the pile foundation. It is not necessary to create a new model; you can start from the previous model, store it under a different name and modify it. To perform this, follow these steps:

- Start the PLAXIS 3D program. The *Quick select* dialog box will appear in which the project of Case B should be selected.
- Select the *Save project as* option in the *File* menu to save the project under a different name (e.g. "Tutorial 1c").

### *Definition of embedded beam*

- Proceed to the *Structures* mode.
- Click the *Create line* button at the side tool bar and select the *Create embedded beam* from the additional tools that appear.
- Define a pile from (6 6 -2) to (6 6 -22).
- Open the material data base and set the *Set type* to *Embedded beams*.
- Create a data set for the embedded beam according to Table 1.4. The value for the cross section area $A$ and the moments of inertia $I_2$ and $I_3$ are automatically calculated from the diameter of the massive circular pile. Confirm the input by clicking *OK*.

Table 1.4 Material properties of embedded beam

| Parameter | Name | Pile foundation | Unit |
|---|---|---|---|
| Young's modulus | $E$ | $3 \cdot 10^7$ | $kN/m^2$ |
| Unit weight | $\gamma$ | 6.0 | $kN/m^3$ |
| Beam type | - | *Predefined* | – |
| Predefined beam type | - | Massive circular beam | – |
| Diameter | *Diameter* | 1.5 | $m$ |
| Axial skin resistance | *Type* | *Linear* | – |
| Maximum traction allowed at the top of the embedded beam | $T_{skin,start,max}$ | 200 | $kN/m$ |
| Maximum traction allowed at the bottom of the embedded beam | $T_{skin,end,max}$ | 500 | $kN/m$ |
| Base resistance | $F_{max}$ | $1 \cdot 10^4$ | $kN$ |

- Drag and drop the *Embedded beam* data to the embedded beam in the drawing area. The embedded beam will change colour to indicate that the material set has been assigned successfully.
- Click the *OK* button to close the *Material sets* window.

**Hint:** A material set can also be assigned to an embedded beam by right-clicking it either in the drawing area or in the *Selection explorer* and the *Model explorer* and selecting the material from the *Set material* option in the displayed menu.

- Click the *Select* button and select the embedded beam.
- Click the *Create array* button.
- In the *Create array* window, select the *2D, in xy plane* option for shape.
- Keep the number of columns as 2. Set the distance between the columns to $x$ = 12 and $y$ = 0.
- Keep the number of rows as 2. Set the distance between the rows to $x$ = 0 and $y$ = 12 (Figure 1.21).
- Press *OK* to create the array. A total of 2$x$2 = 4 piles will be created.

### *Mesh generation*

As the geometry model is complete now, the mesh can be generated.

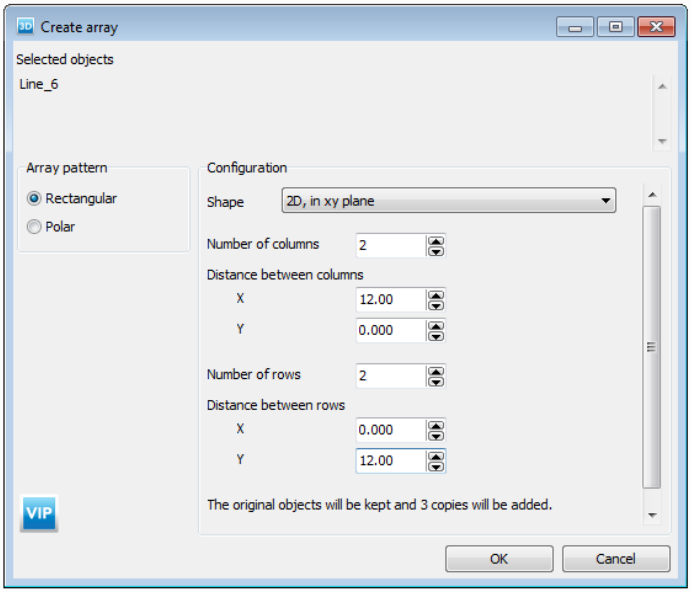


Figure 1.21 *Create array* window

Create the mesh. Keep the *Element distribution* as *Coarse*.

View the mesh.

- Click the eye button in front of the *Soil* subtree in the *Model explorer* to hide the soil. The embedded beams can be seen (Figure 1.22).
- Click on the *Close* tab to close the Output program and go back to the *Mesh* mode of the *Input* program.

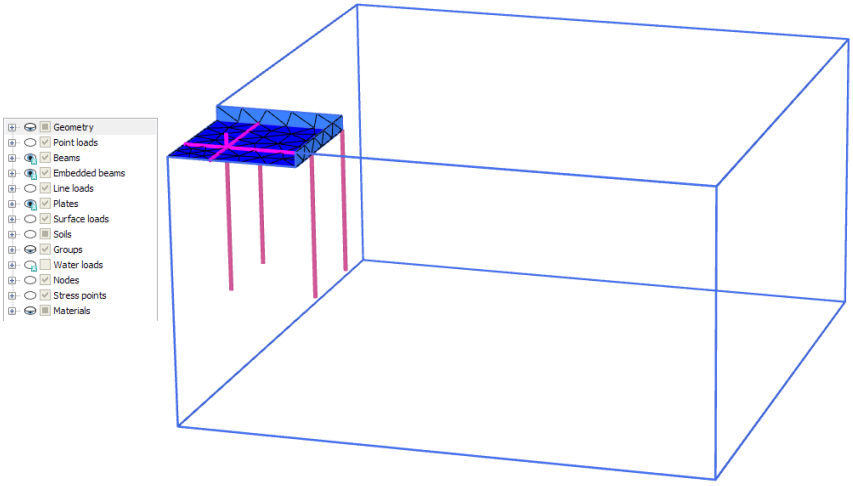


Figure 1.22 Partial geometry of the model in the Output

### *Performing calculations*

After generation of the mesh, all construction stages must be redefined. Even though in practice the piles will be constructed in another construction stage than construction of the walls, for simplicity both actions will be done in the same construction stage in this tutorial. To redefine all construction stages, follow these steps:

- Switch to the *Staged construction* mode.
- Check if the *K0 procedure* is selected as *Calculation type* for the initial phase. Make sure that all the structural elements are inactive and all soil volumes are active. The material assigned to it is *Lacustrine clay*.
- Select the *Excavation* phase in the *Phases explorer*.
- Make sure that the basement soil is excavated and the basement walls are active.
- Activate all the embedded beams.
- In the *Phases explorer* select the *Construction* phase. Make sure that all the structural elements are active.
- In the *Phases explorer* select the *Loading* phase. Make sure that all the structural elements and loads are active.

Calculate the project.

Save the project after the calculation.

- Select the *Loading* phase and view the calculation results.
- Double-click the basement floor. Select the $M_{11}$ option from the *Forces* menu. The results are shown in Figure 1.23.
- Adjust the legend by changing scaling settings into:
  - Scaling: manual
  - Minimum value: -450
  - Maximum value: 550
  - Number of intervals: 18
- Select the view corresponding to the deformed mesh in the *Window* menu.

Click the *Toggle visibility* button in the side toolbar.

- To view the embedded beams press *Shift* and keep it pressed while clicking on the soil volume in order to hide it.

Click the *Select structures* button. To view all the embedded beams, press *Ctrl+Shift* keys and double click on one of the piles.

- Select the option *N* in the *Forces* menu to view the axial loads in the embedded beams. The plot is shown in Figure 1.24.

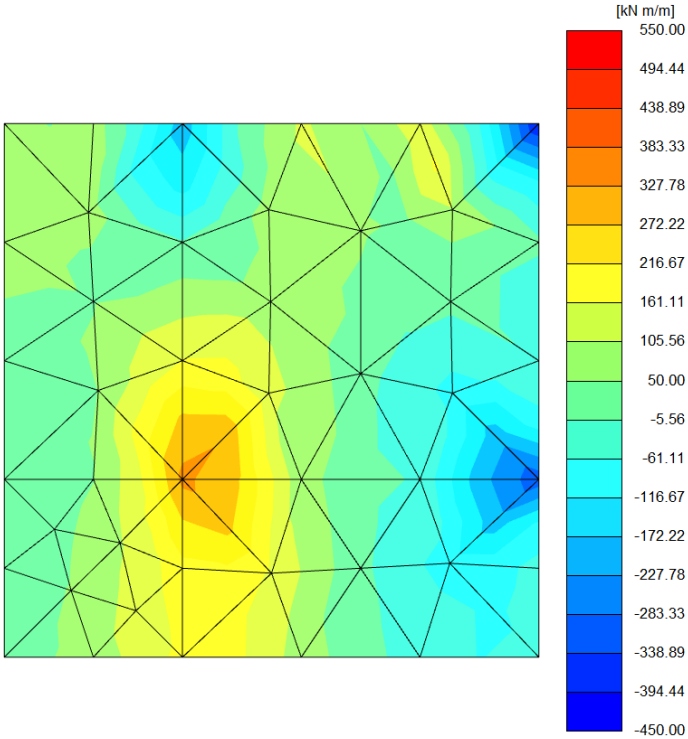


Figure 1.23 Bending moments in the basement floor

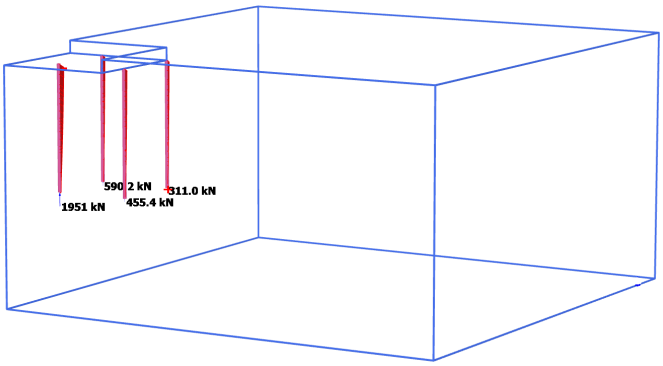


Figure 1.24 Resulting axial forces (N) in the embedded beams