Introduction:

Let us use a frame model to illustrate how the Interactive Concrete Designer Works. The model looks like the one in the picture below:

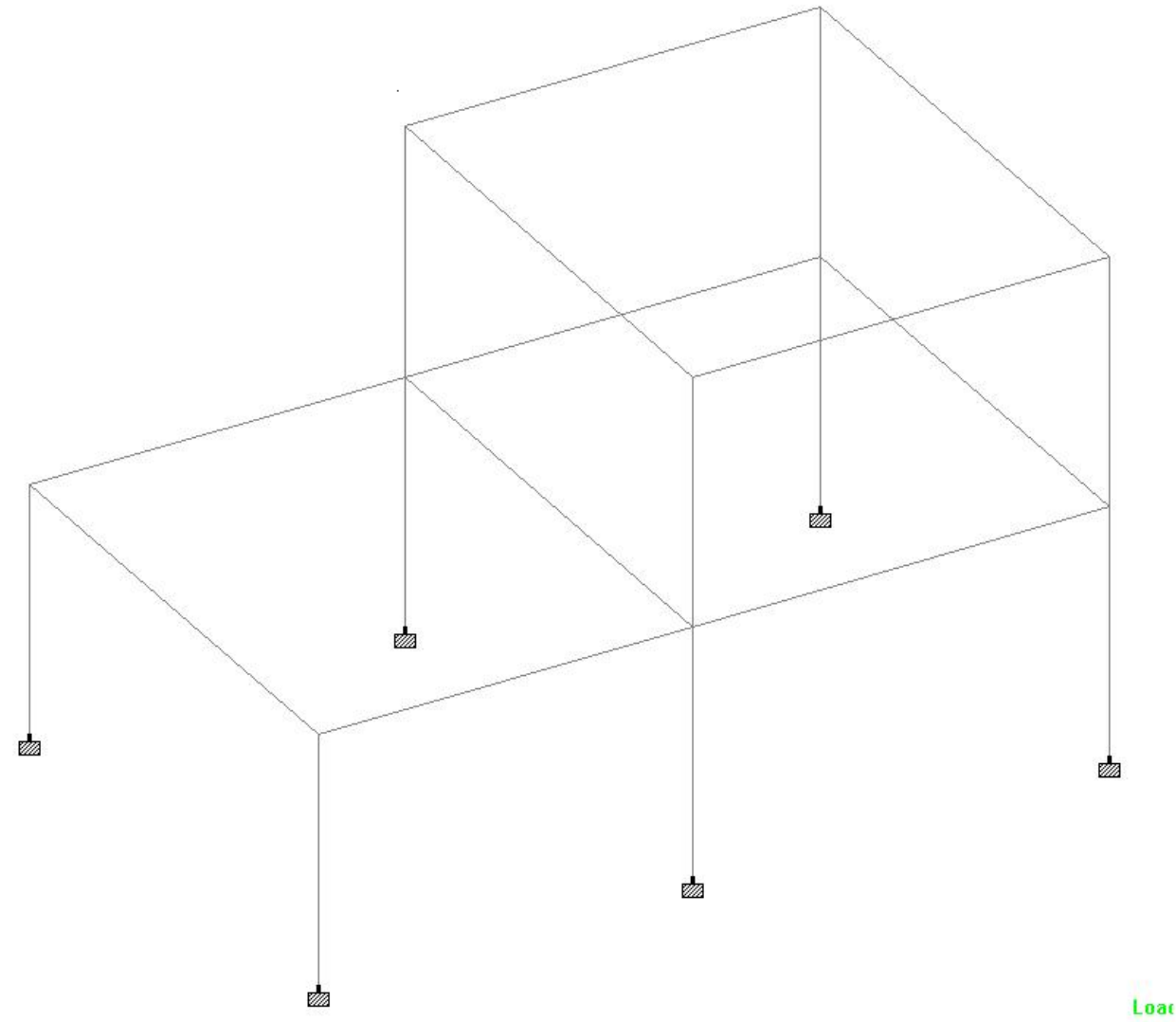

Fig. 1

It is always imperative to perform the analysis in STAAD before going into the Interactive Concrete Designer. The Designer reads the analysis results from the analysis file and then designs the selected members. Thus, analyzing the model is a necessary prerequisite.

How to access the Interactive Concrete Designer:

Once the analysis has been done, we can go into the Interactive Concrete Designer. The Interactive Concrete Designer can be accessed from two locations:

1. From the main-menu bar go to Mode>Interactive Designs> Concrete Design. This is shown in the figure below:

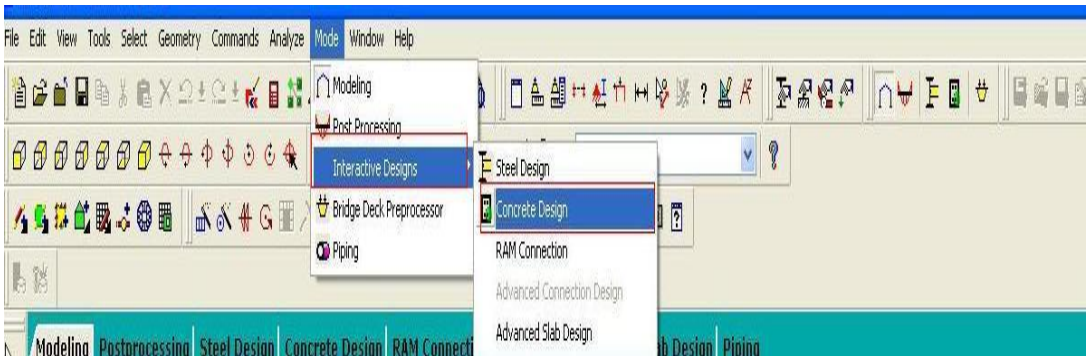

Fig. 2

2. From the Green Title bar by clicking on "Concrete Design". This is also shown in the figure below:

Fig. 3

Concrete Designer Screen – A description:

Once we get into the Concrete designer from the above-mentioned locations, the screen will look like the one as shown below. There are a few tabs on the left, which are arranged sequentially from the top to the bottom, which we need to follow to complete the design project. These tabs have been enclosed by a red rectangle and the direction of sequence has been indicated by an arrow sign in the figure below.

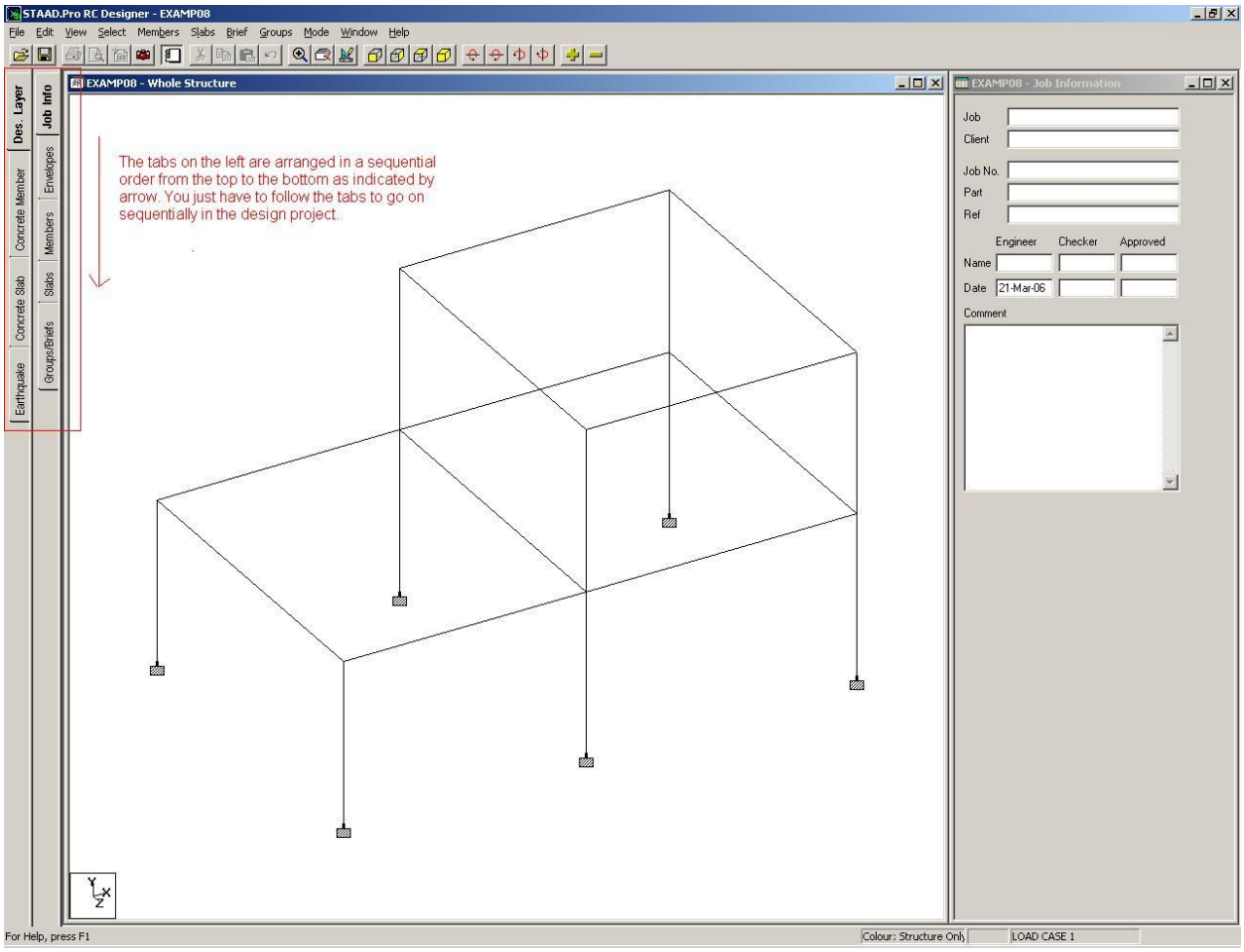

Fig. 4

We need to work from the “Design layer” to the “Earthquake” tab, based on our requirements. For example, if you are not designing any slabs, like in this case, we need not use the “Concrete Slab Case.

There are two rows of tabs, as can be seen in the figure above. The first row is the row of the main tabs. When you click on one main tab, a list of sub-tabs for that main tab will appear in the second row. For example, when you click on the “Concrete Member” main tab, the list of sub-tabs will be as shown in the figure below:

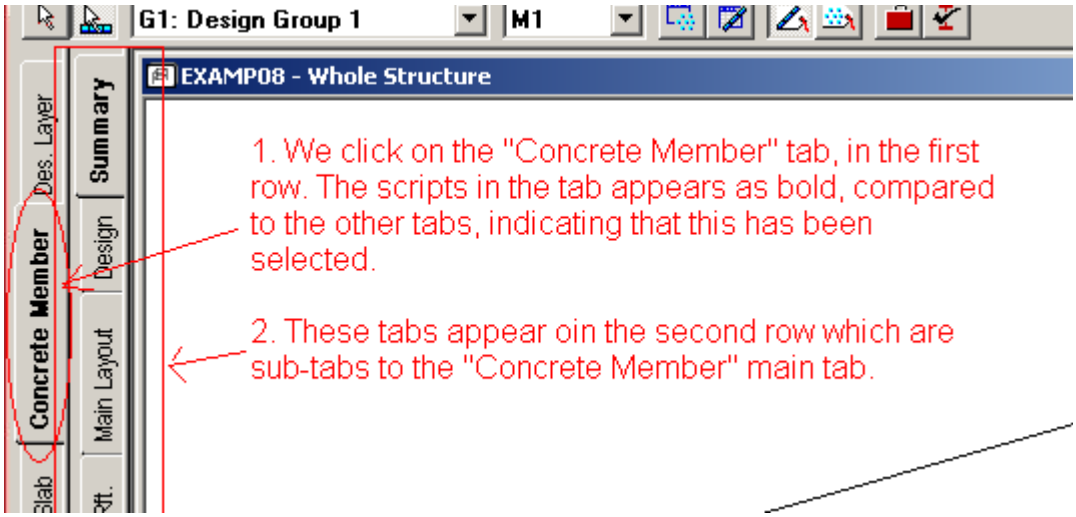

Fig. 5

Note that you would not be able to get in the “Concrete Member” tab immediately after you have entered the RC designer. As we go on, we will show how we get into this mode. The above figure is just to illustrate the purpose of the two rows of tab. Note that main-tab “Concrete Member” and sub-tab “Summary” is shown in bold, indicating that those tabs are active.

Now, we get starting on our design project.

Step 1- Entering the Job Info:

When we get into the RC designer, by default, we will be in the “Des. Layer” main tab and “Job Info” sub-tab. We will refer this as Des. Layer > Job Info page. Hence-forth, all these combinations of main tab and sub-tabs will be described in this manner for convenience.

In this page, the screen is like the one as shown in Figure 4. If we look at the right side of the screen, we will find a box provided for the purpose of entering the Job Information. The following figure shows us the figure of the Job-information box exclusively.

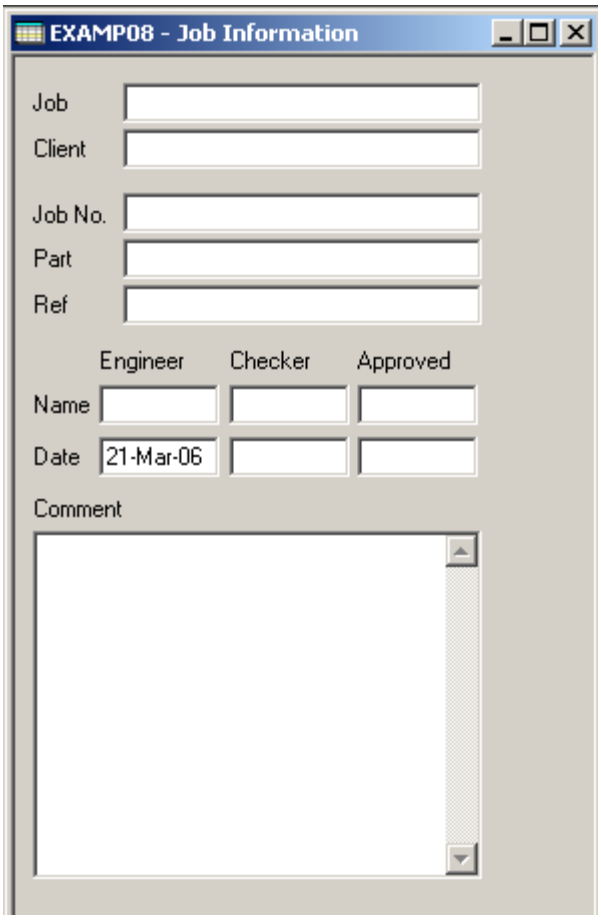

Fig. 6

Step 2 - Creating the Load Envelope:

Once we have entered the “Job Info”, let us get into the “Des. Layer > Envelope” page. This page helps us to select the load cases (primary and combinations), we have already defined, while modeling the structure and that are to be included in the design, and create an envelope with it. In this page, the careen looks like the one as shown in Fig. 7 as below:

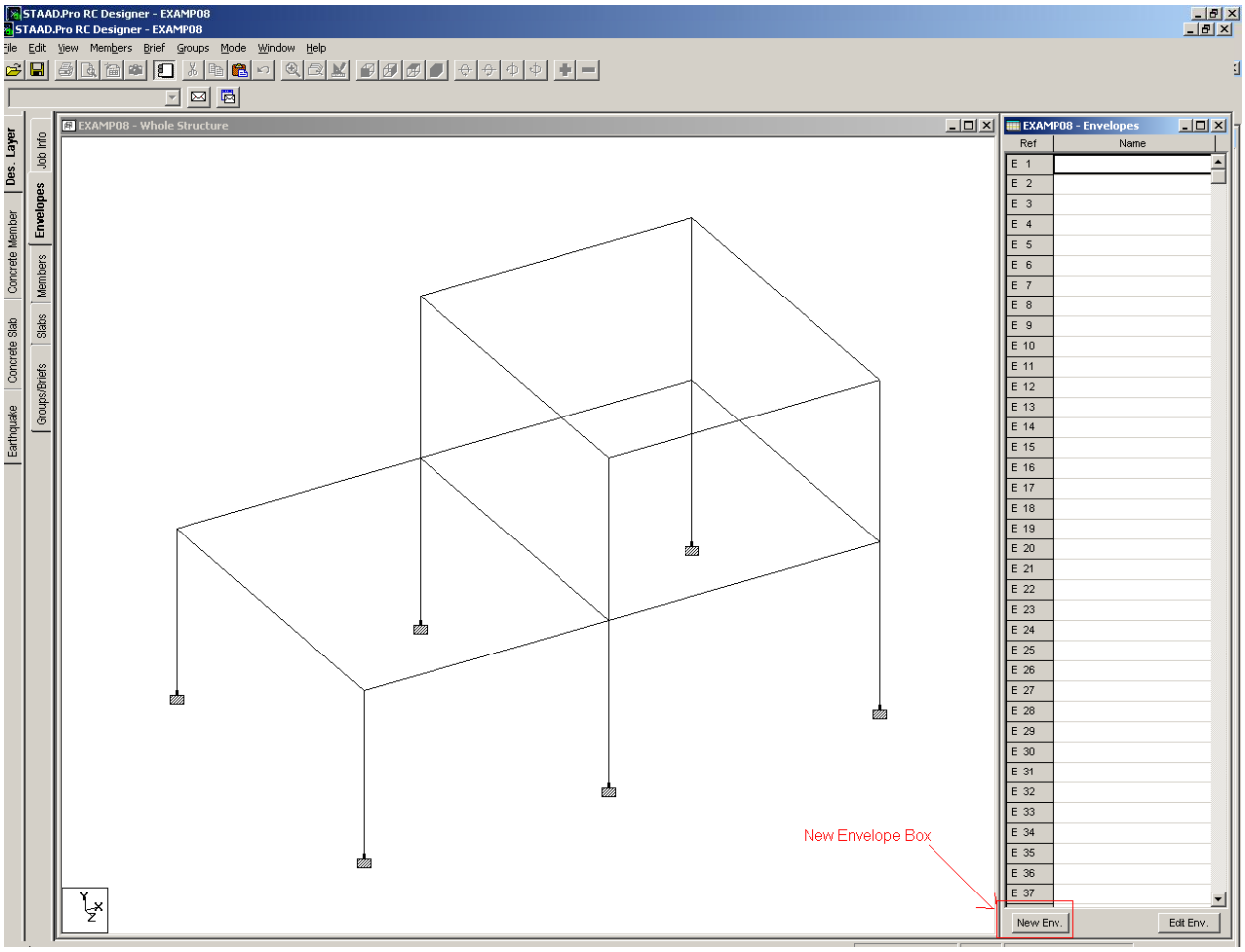

Fig. 7

Now, let us look at the screen at the right which shows us the “Load Envelopes” box. To create a new load envelope we need to click on the tab called “New Env.”, which has been highlighted in the figure 7 above.

On clicking the “New Env.” Tab, a box titled “New Envelope” appears, as shown in figure 8, below:

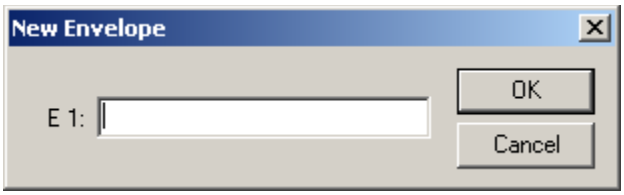

Fig. 8

We need to put in the name of the envelope in the edit window of the box. Let us put a name called 1and click OK. The following dialogue box titled “Define Envelopes” appears:
********EDITING DONE BY SUDIP TILL THIS POINT**********

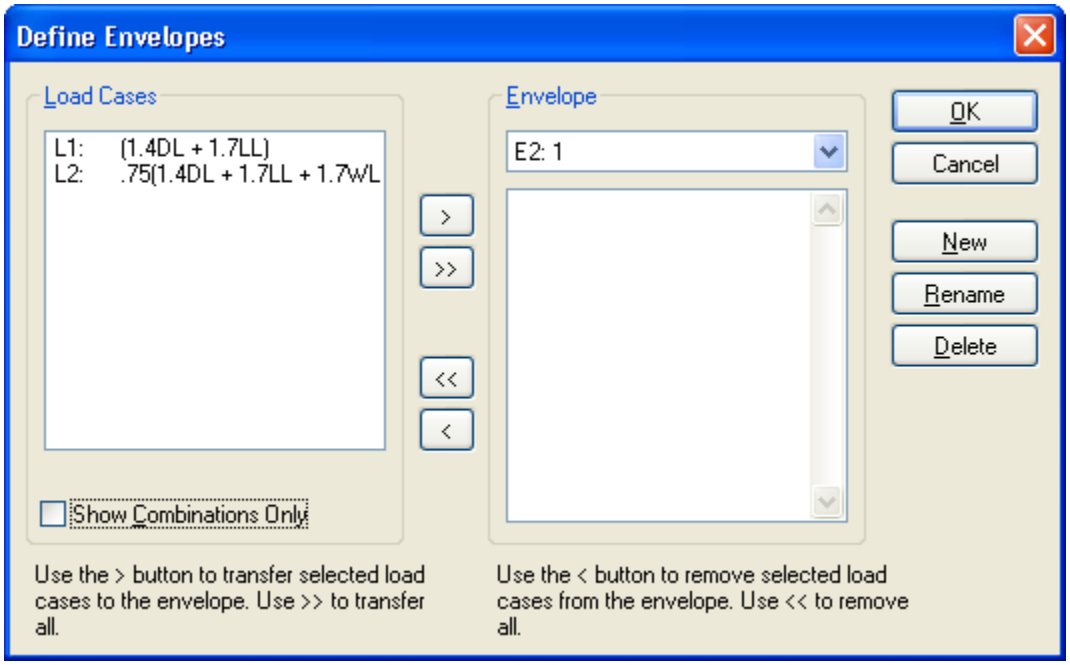

If there is any load cases it will be reflected on the left side of the box

If you want to see load combinations also you have to check out the box called" Show Load Combinations Only". As shown in the figure.

You can select one load combination and hit > or select all loads combinations and hit >> and the load combinations will be transferred to the right hand side .Click Ok.

Thus, we have created our load envelope, which includes loads L 1 and L 2. The Ref. for the Load Envelope is E2 as can be seen from the figure above. We can click on E2 to select the load envelope and then click on the "Edit Envelope" button to edit our load envelope.

Step 2- Defining the Physical members:

In STAAD, Every member between nodes is treated as a separate member.

.

For example, have a look at the figure below:

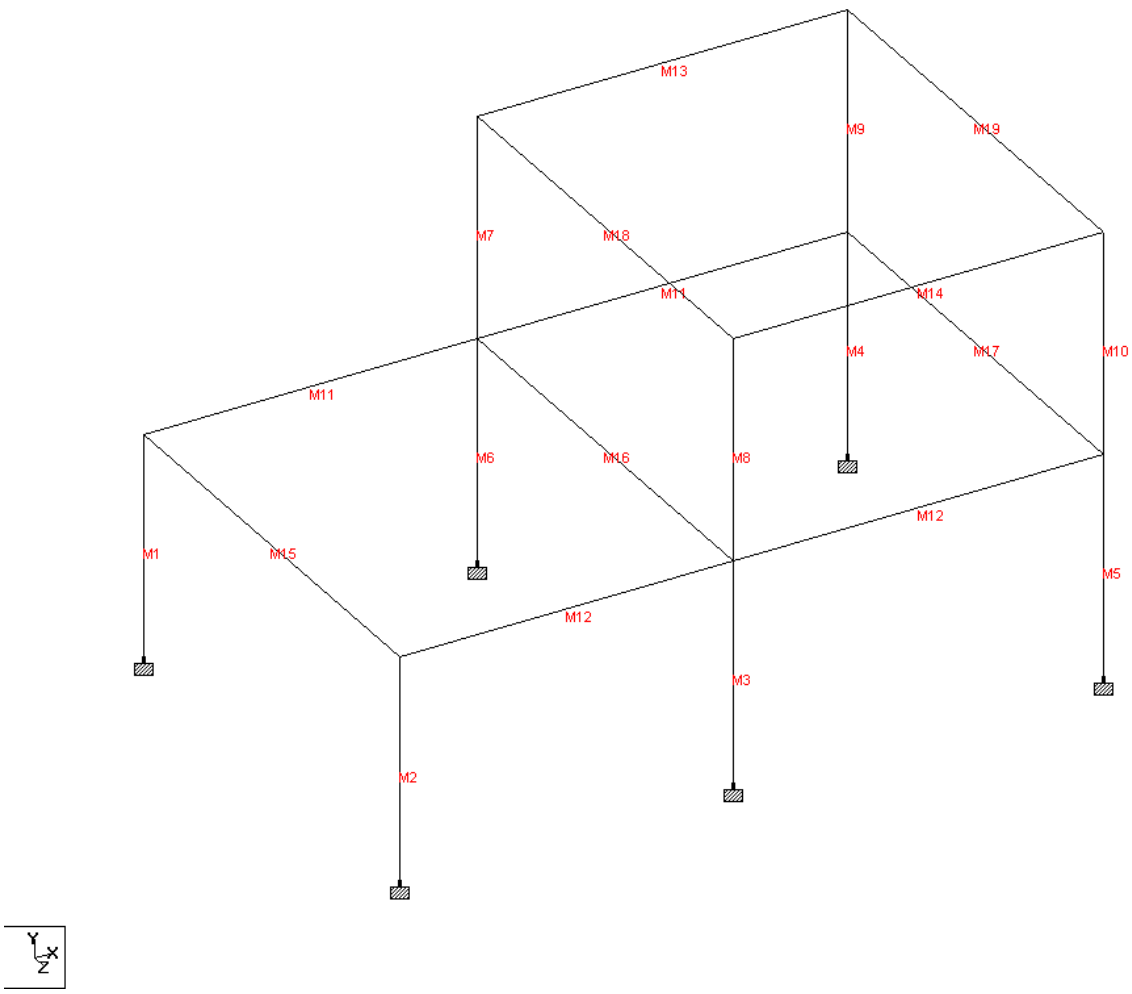

For this, it is important for us to know the concept of “Form members” and the “AutoForm members”.

One member or two continous member in the same direction will form a physical member. So let us highlight two continuous members in the same direction and then select Member-→Form Member as shown below.

Consequently two continuous members will form physical members M1 as shown in the figure below.

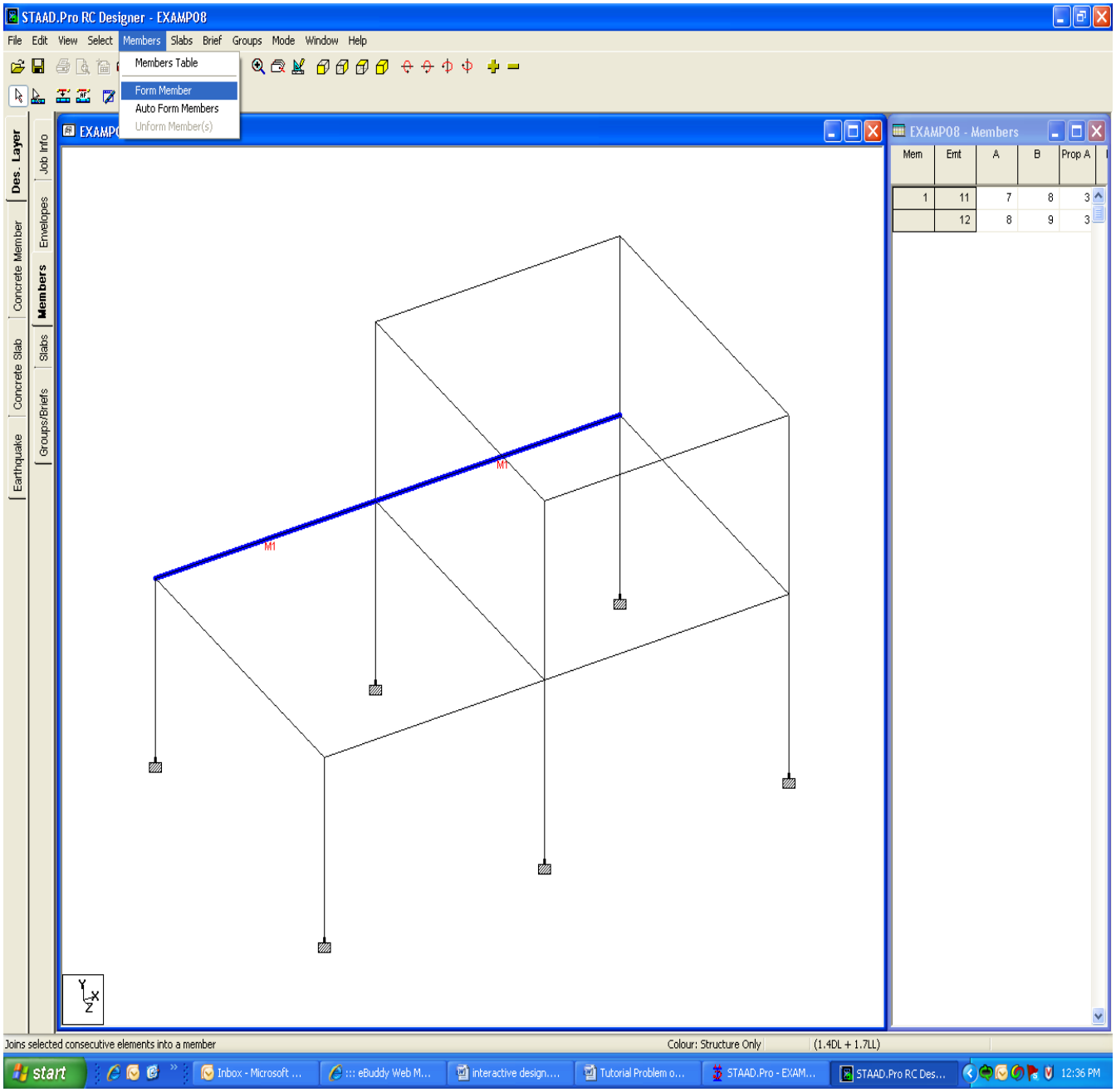

The member highlighted in the figure above are members formed by Formed Member

Now, instead of selecting each member at a time and pressing on “Form members” to achieve our objective, we try and do that in one shot. For that, we use the principle of “Auto-Form members”. The location and the icon of this option is shown in the figure below:

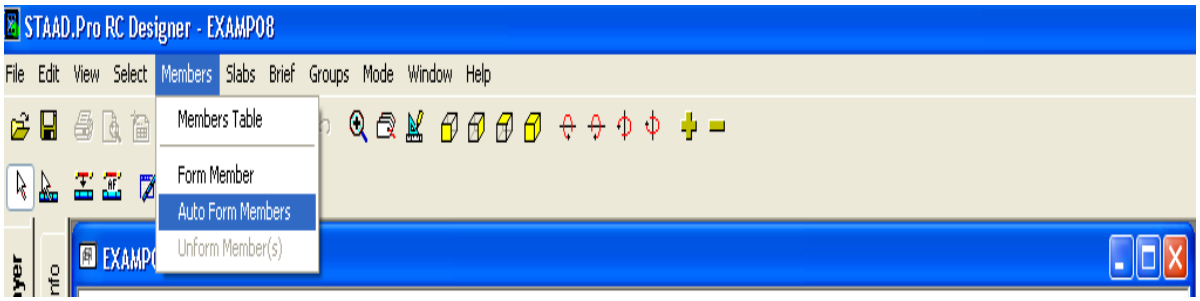

Now, let us select all the other members that have not yet been defined as a physical member. After selecting all such members, the model should appear as shown in the next page.

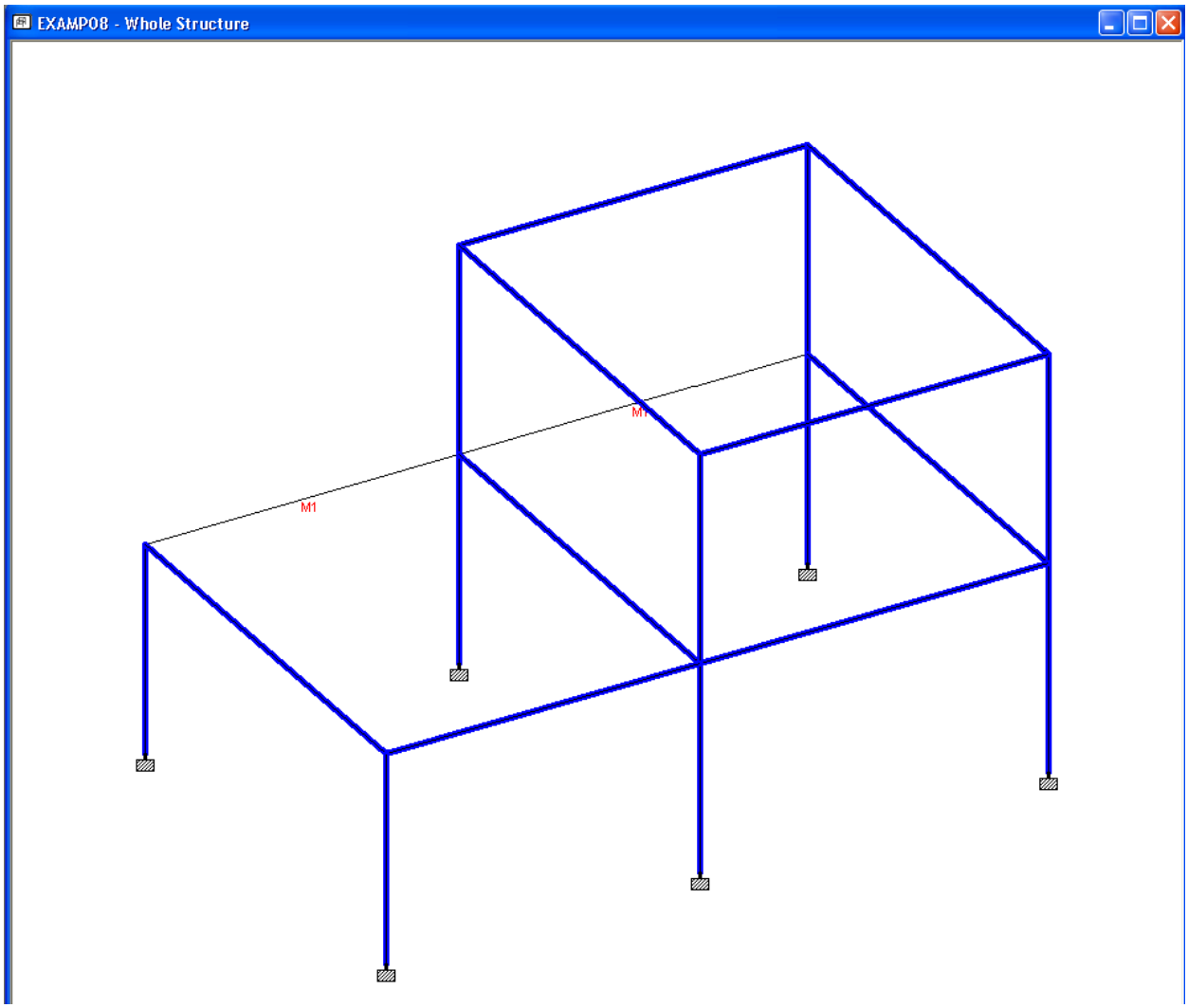

Now, press the option “Auto-Form Members”. We find that immediately all the remaining members are assigned the status of a physical member in a sequential order. The model, now should look like the one as shown in the figure in the next page:

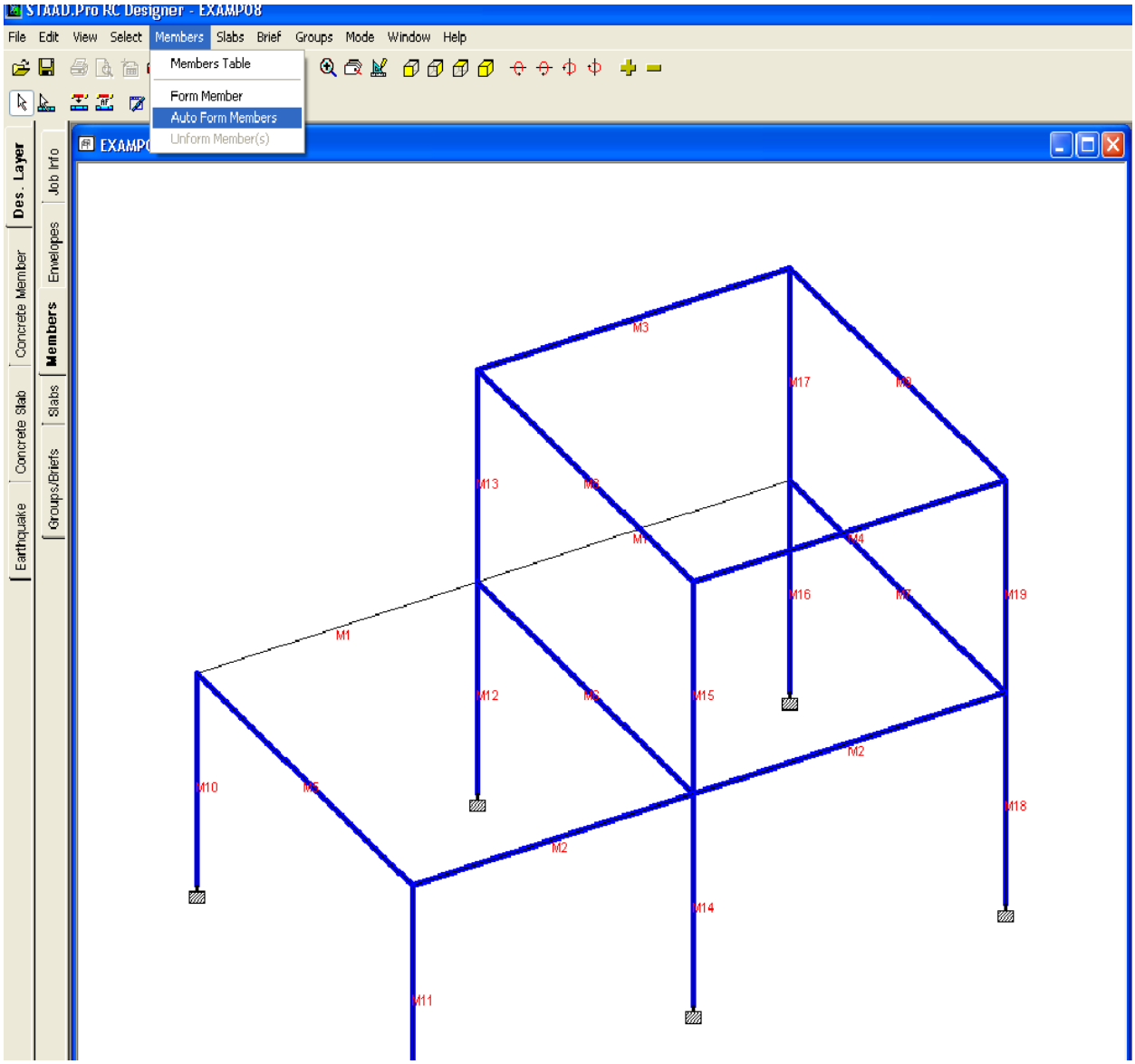

The members highlighted in the figure are Auto Form Members.

<u>Let us first start creating brief and group for a beam consisting of physical member M1</u>

(Here we will design beam and column according to BS8110)

Step 3- Create Brief

For this, we have to click on the “Group /Brief Tab ” on th left hand side of GUI. Immediately, the screen looks like the one as shown in the figure below.

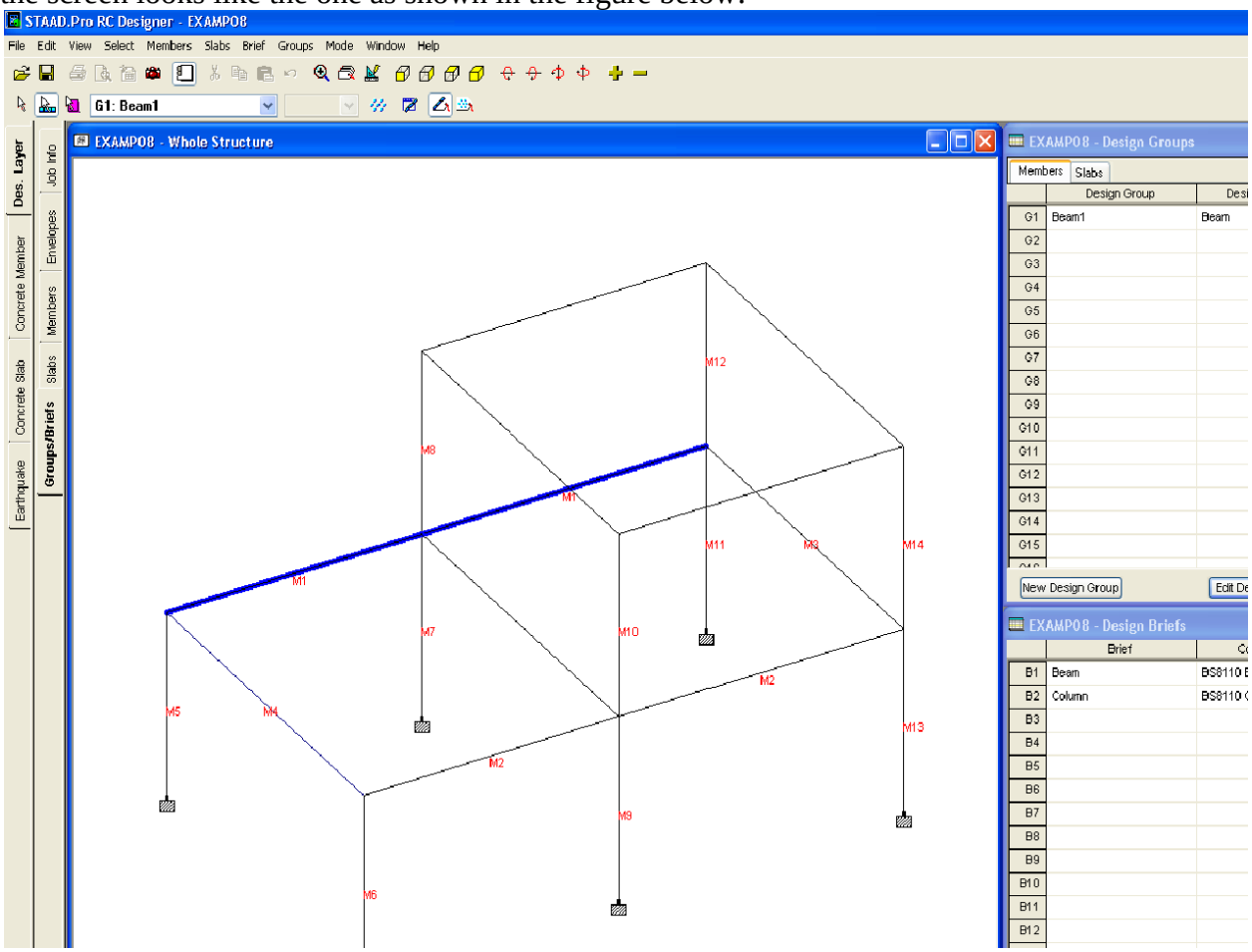

Then click on New brief Tab and enter brief name say beam and design code BS8110.

So let us select Design Type –beam and hit ok. Look at the figure in the next page.

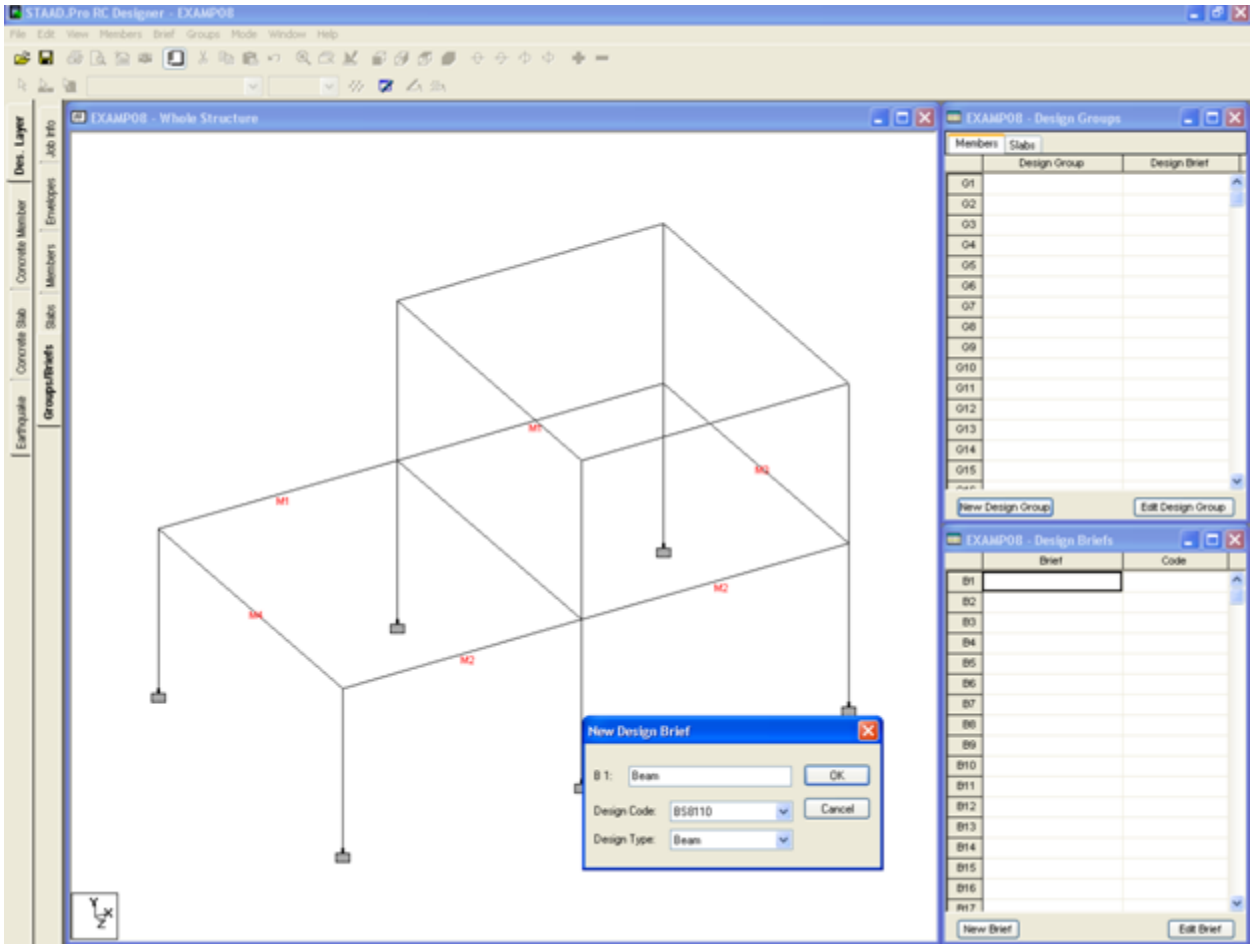

The following windows comes up after clicking ok

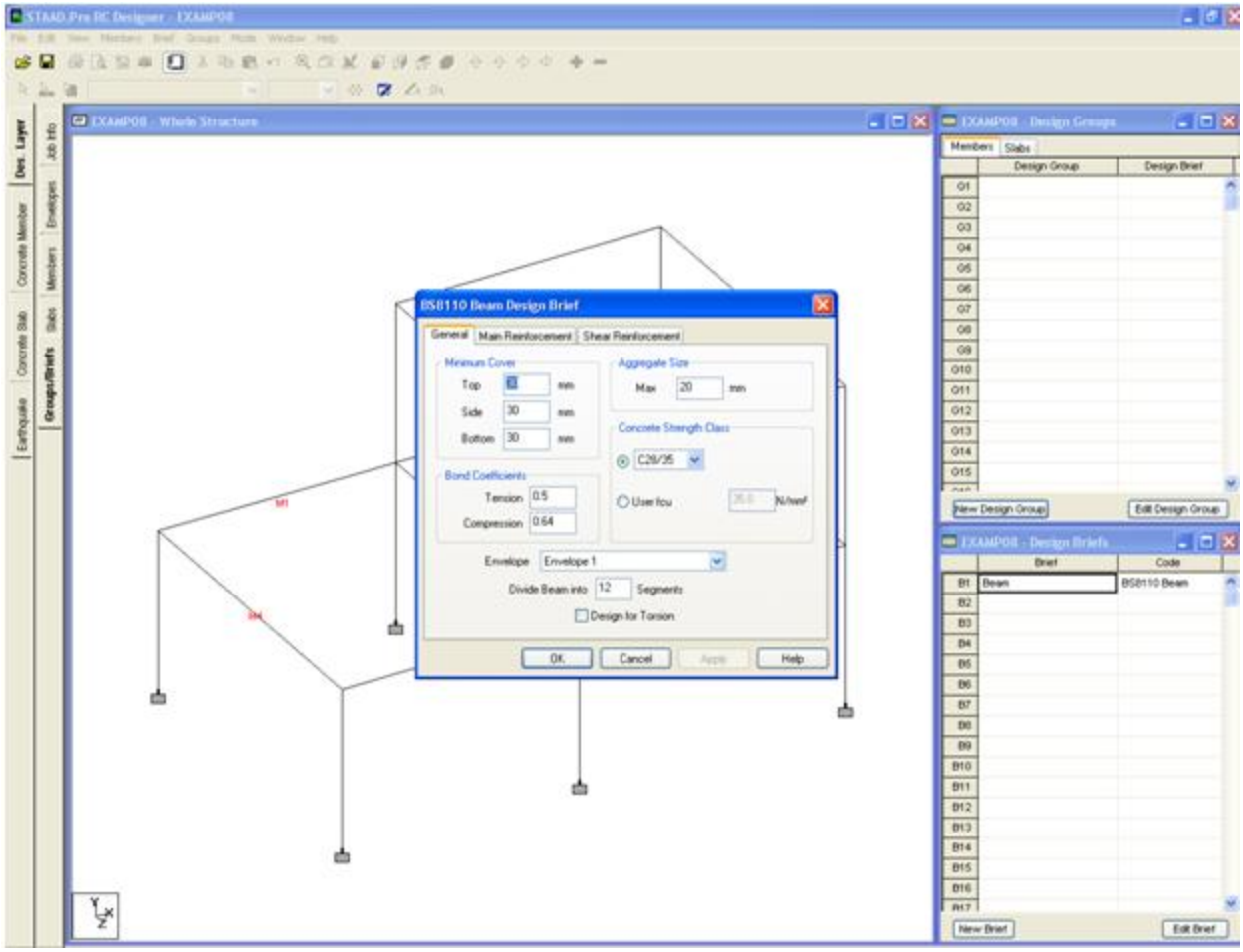

You can assign values under general tab to different specifications according to your requirement and similarly you can fill up values for specifications under Main Reinforcement Tab and Shear Reinforcement Tab conforming to your design code and hit ok.
Let us consider here default values for the specifications under each tab.

Step4- Create Group

Next let us create Group .Click New Design Group as shown below and name the group say Beam1 as shown below. Click Ok

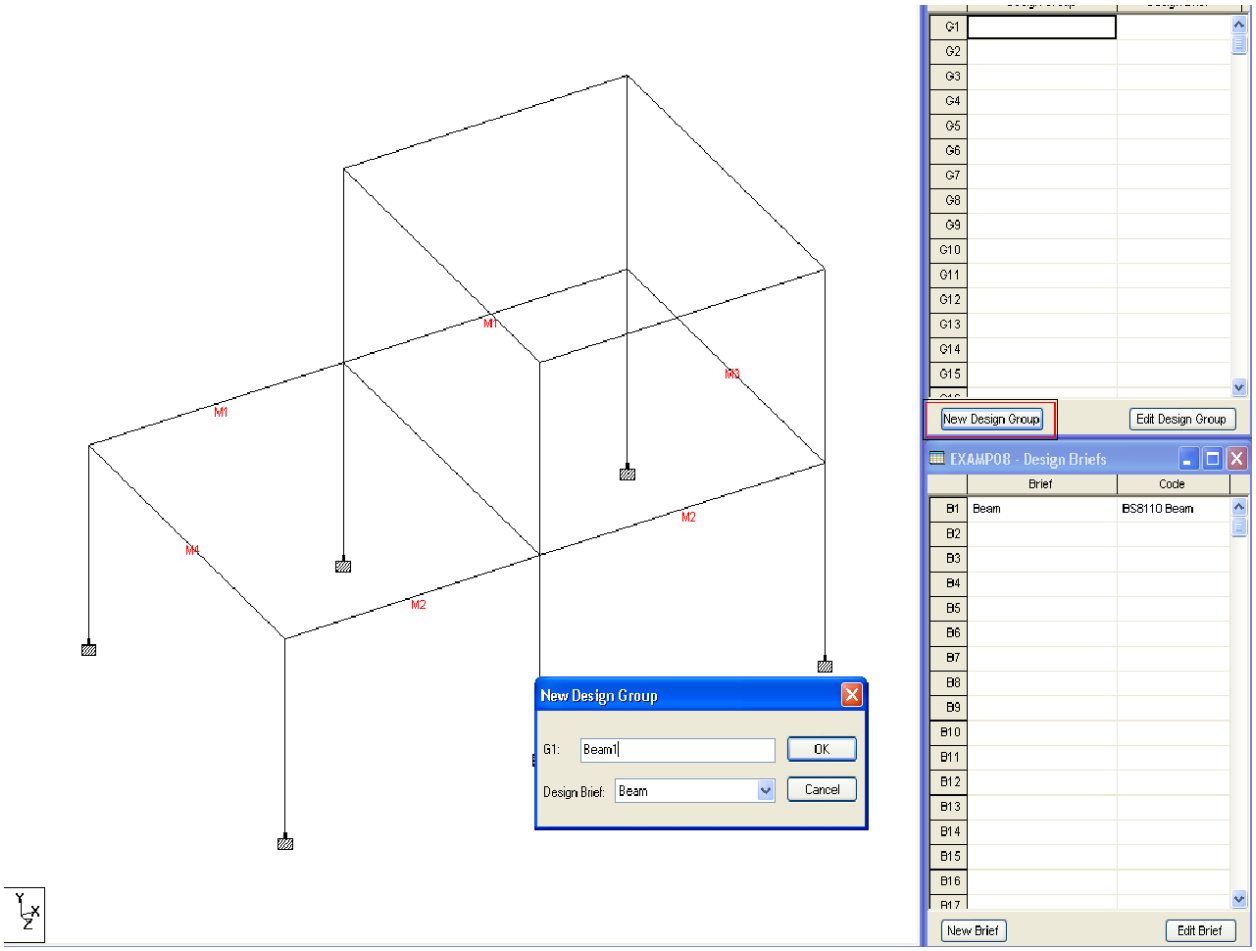

Step5- Adding Member to Design Group

Now select physical member M1 and right click on it.

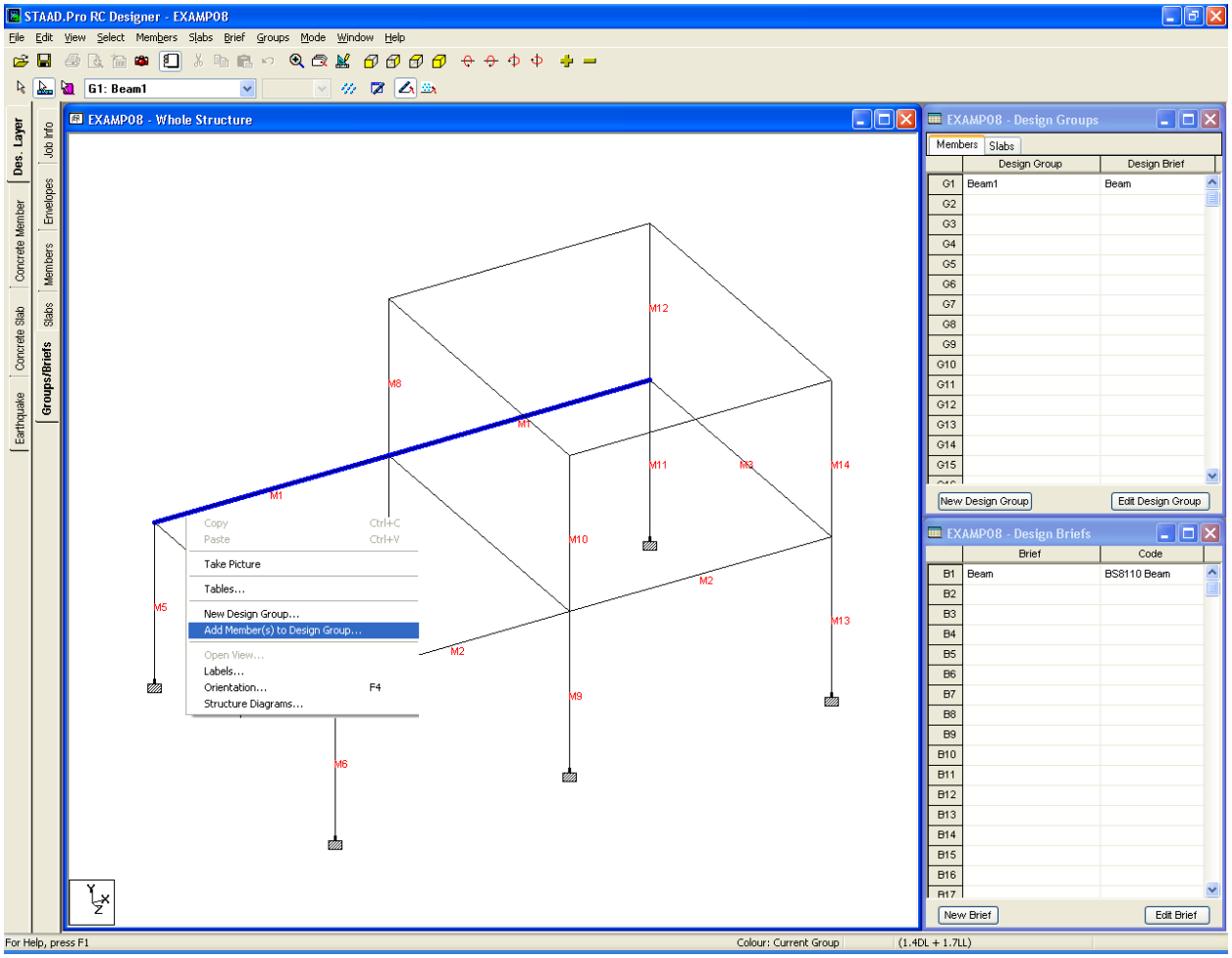

Next when we click “Add member(s) to Design Group”. The following window appears

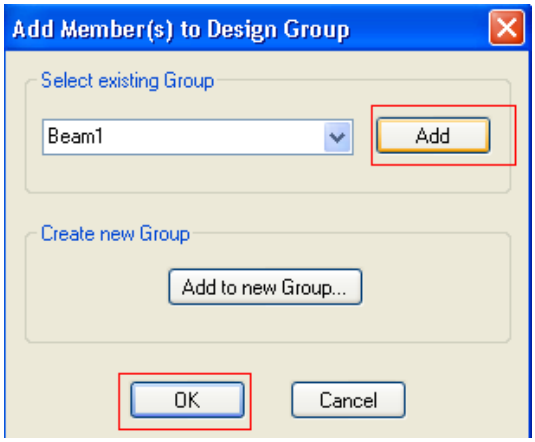

Click Add and Ok

Step6- Member Design

Click on Mode-→Member Design as shown below.

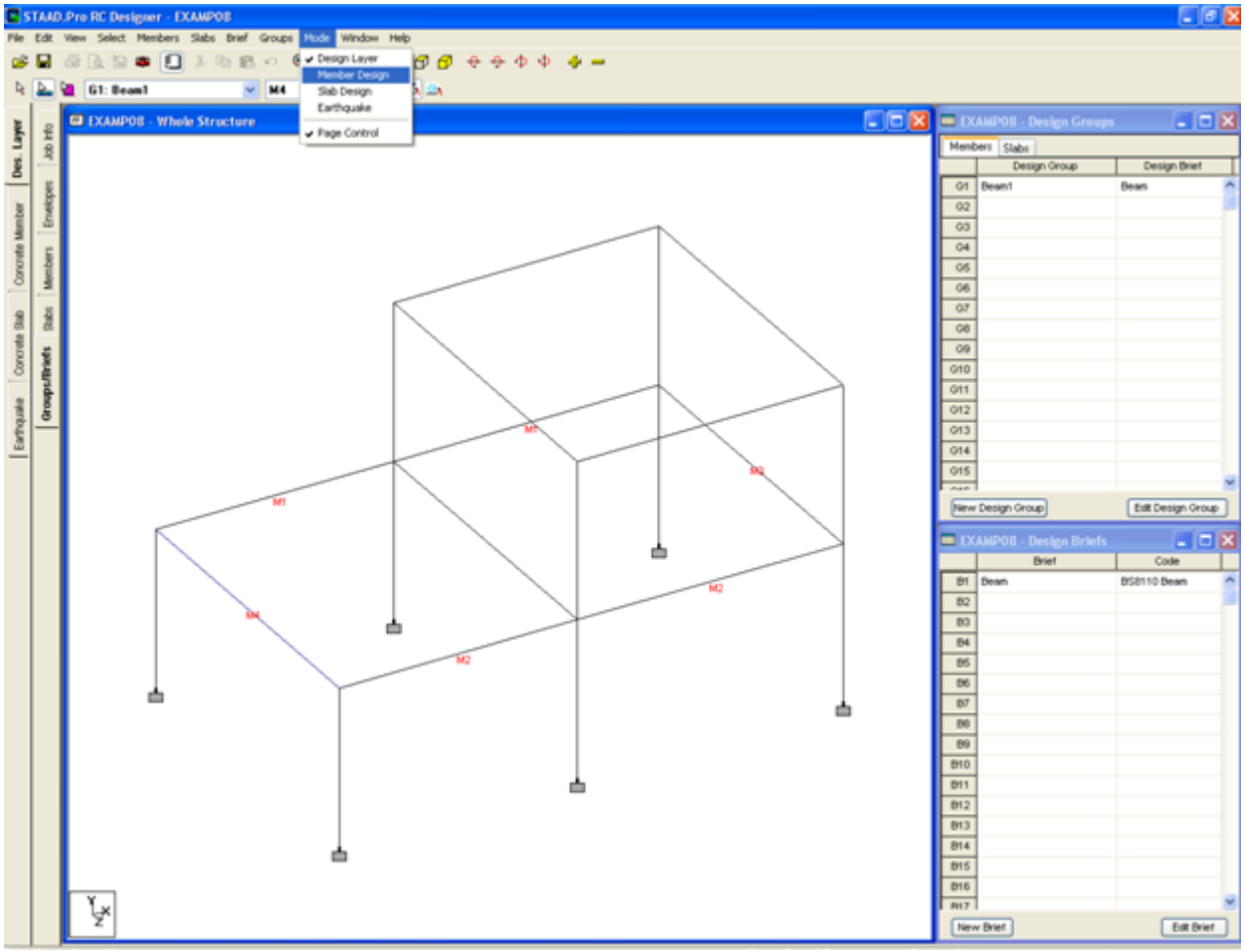

The window appear as shown in the next page.

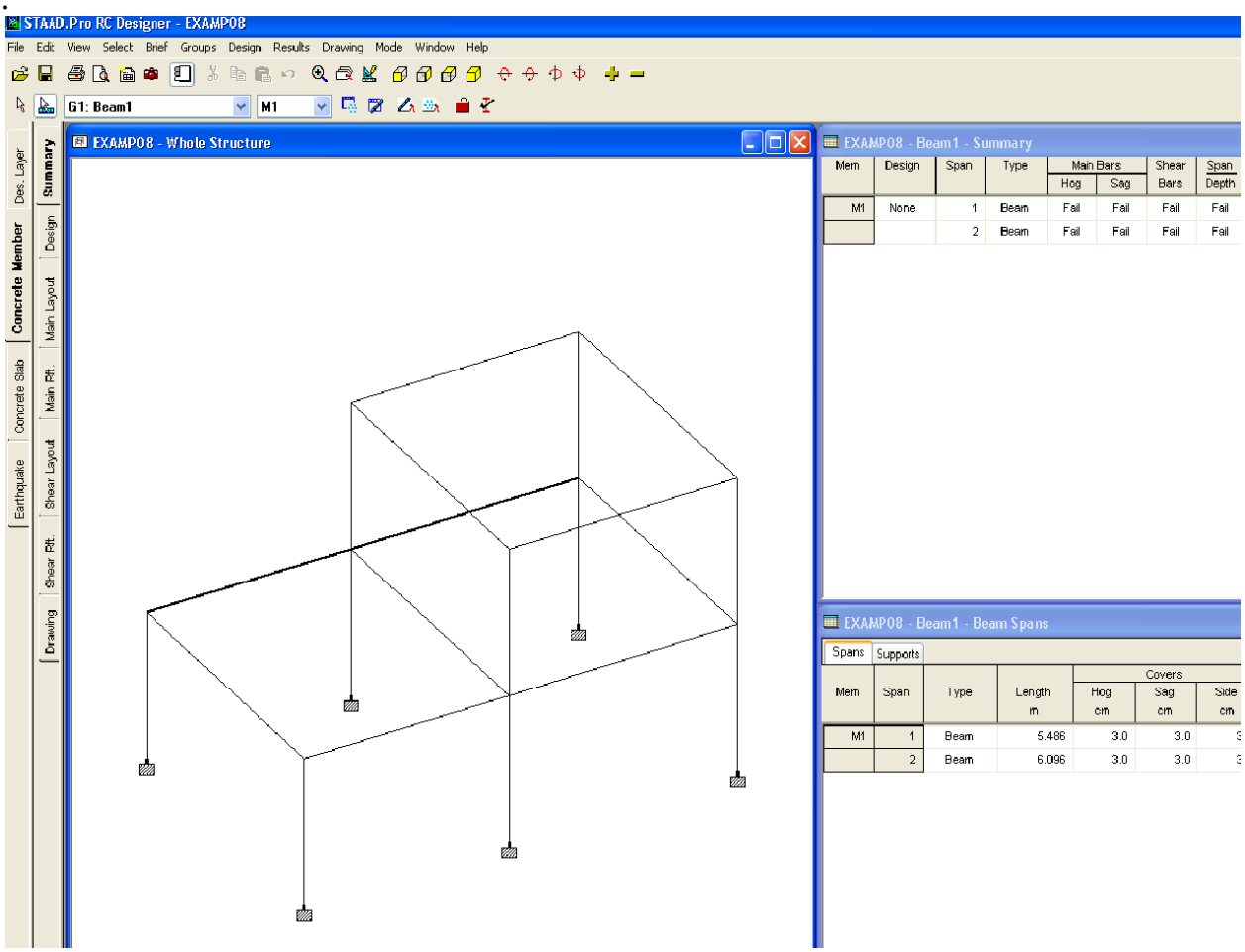
STAAD.Pro RC Designer - EXAMP08
File Edit View Select Brief Groups Design Results Drawing Mode Window Help
G1: Beam1
M1
EXAMP08 - Whole Structure
Des. Layer
Summary
Design
Main Layout
Main Rft.
Shear Layout
Shear Rft.
Drawing
Concrete Member
Concrete Slab
Earthquake
EXAMP08 - Beam1 - Summary
Mem | Design | Span | Type | Main Bars Hog | Main Bars Sag | Shear Bars | Span Depth
M1 | None | 1 | Beam | Fail | Fail | Fail | Fail
2 | Beam | Fail | Fail | Fail | Fail
EXAMP08 - Beam1 - Beam Spans
Spans
Supports
Mem | Span | Type | Length m | Covers Hog cm | Covers Sag cm | Covers Side cm
M1 | 1 | Beam | 5.486 | 3.0 | 3.0
2 | Beam | 6.096 | 3.0 | 3.0

Let us click on Main Reinforcement tab and it appears as below:

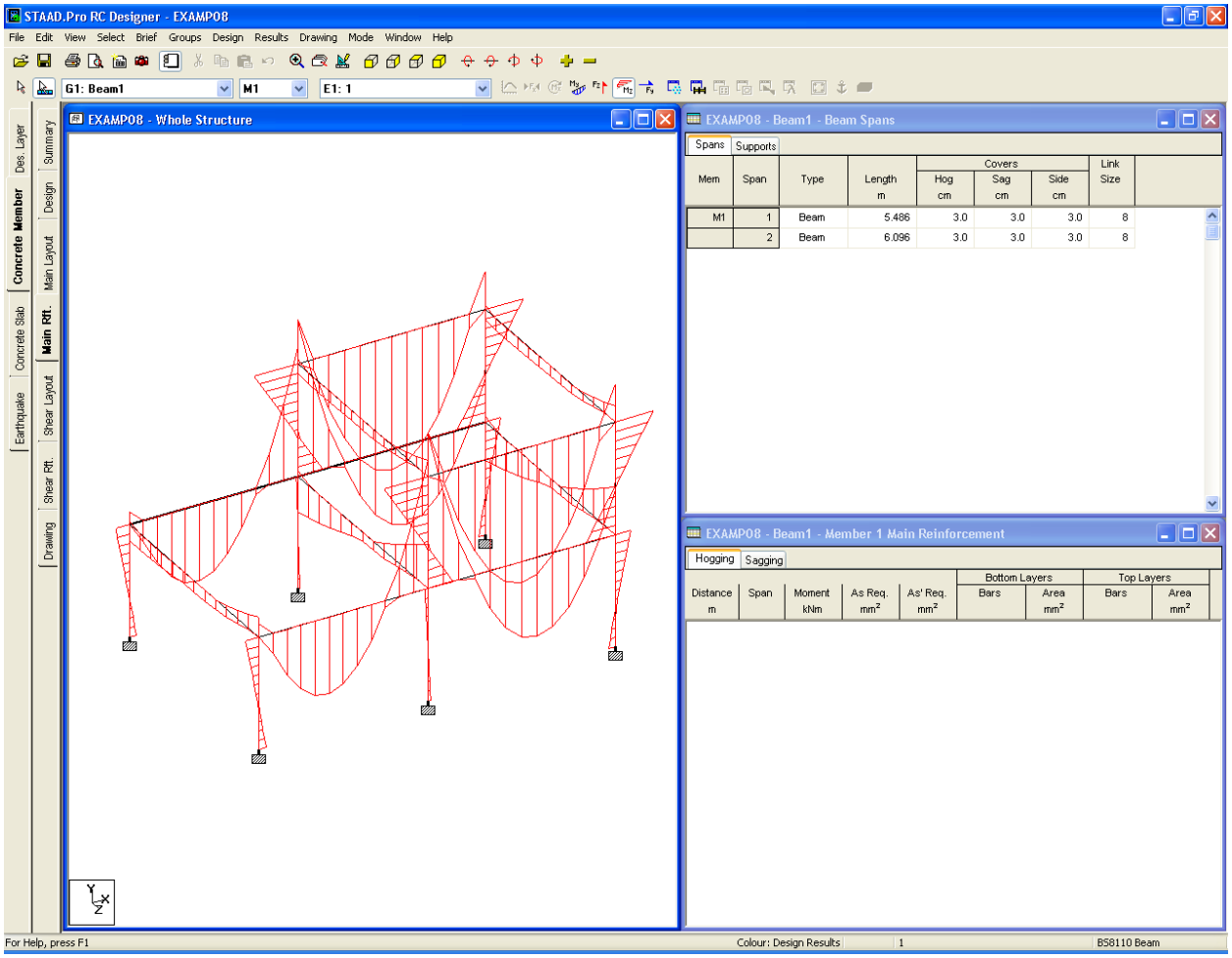

Similarly if we want to see main layout ,shear reinforcement etc the corresponding results will appear .

Let us now repeat the same steps for Design of Column consisting of physical member M7

Create Brief

Similar to Design Brief For Beam , we have to click on the “Group /Brief Tab ” on th left hand side of GUI.
Then click on New brief Tab and enter brief name say Column and design code BS8110.

So let us select Design Type –Column and hit ok. Look at the figure below.

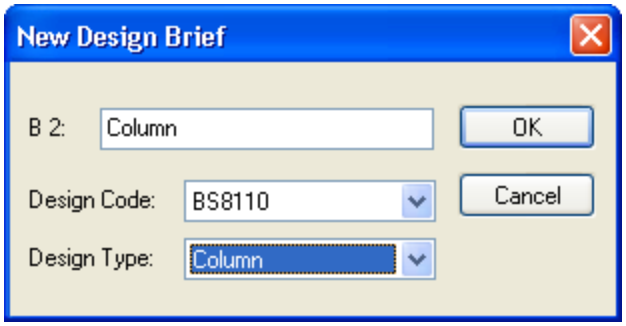

Click Ok.

You will be taken to BS8110 Design Brief window as shown in the figure in the next page.

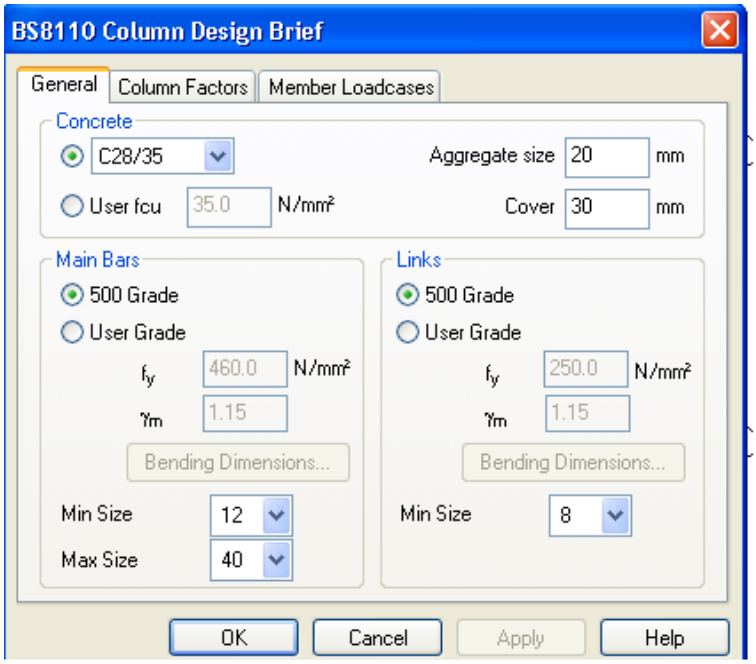

You can assign values under general tab to different specifications according to your requirement and similarly you can fill up values for specifications under column Factors and Member load cases Tab conforming to your design code and hit ok.

Please remember to transfer loadcases to the selected side by >> when you go to Member Loadcase command.

Let us consider here default values for the specifications under each tab. Click Ok.

Create Group

Next let us create Group .Click New Design Group as shown below and name the group say Column 1 as shown in next page . Click Ok

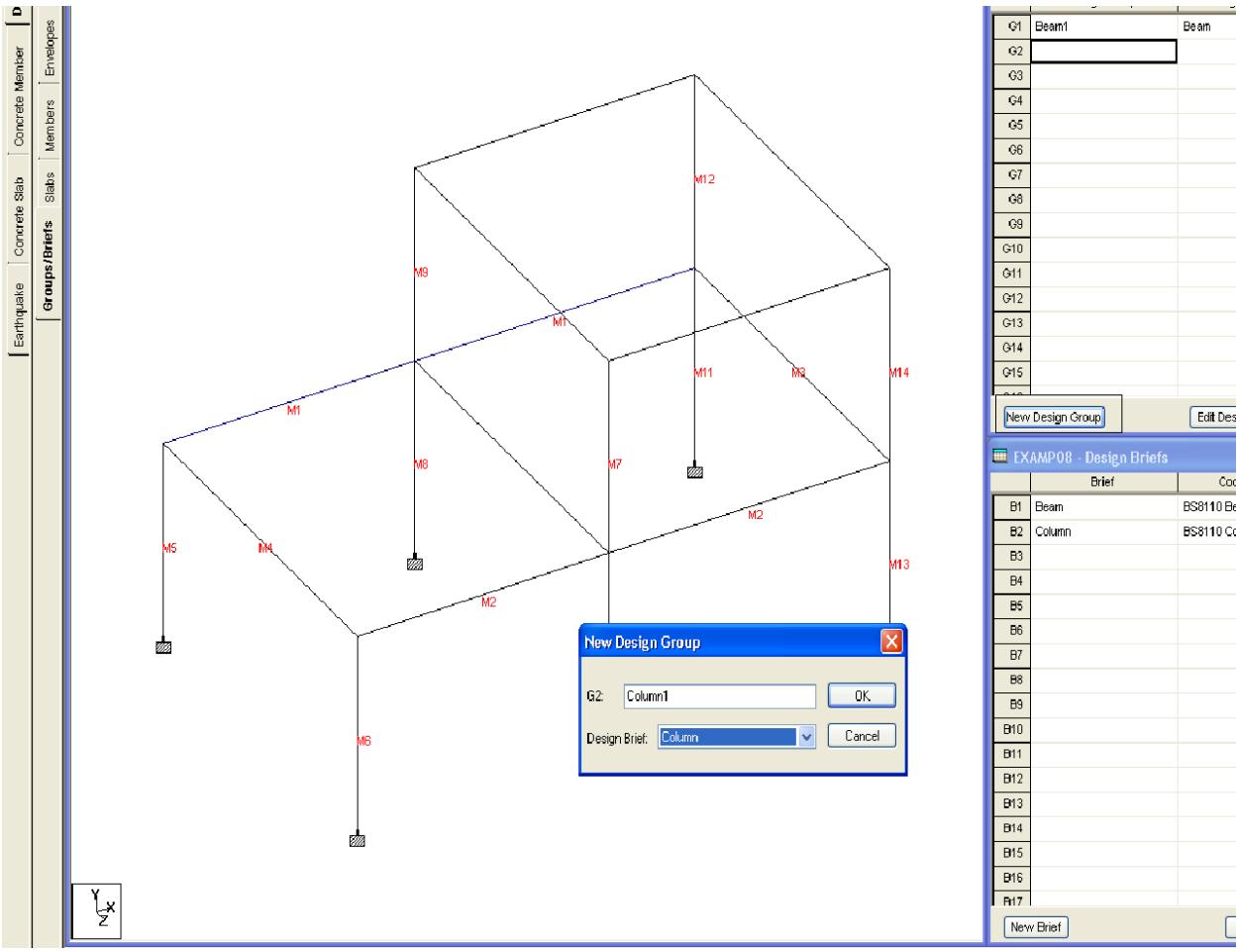

Adding Member to Design Group:

Now select physical member M7 and right click on it.

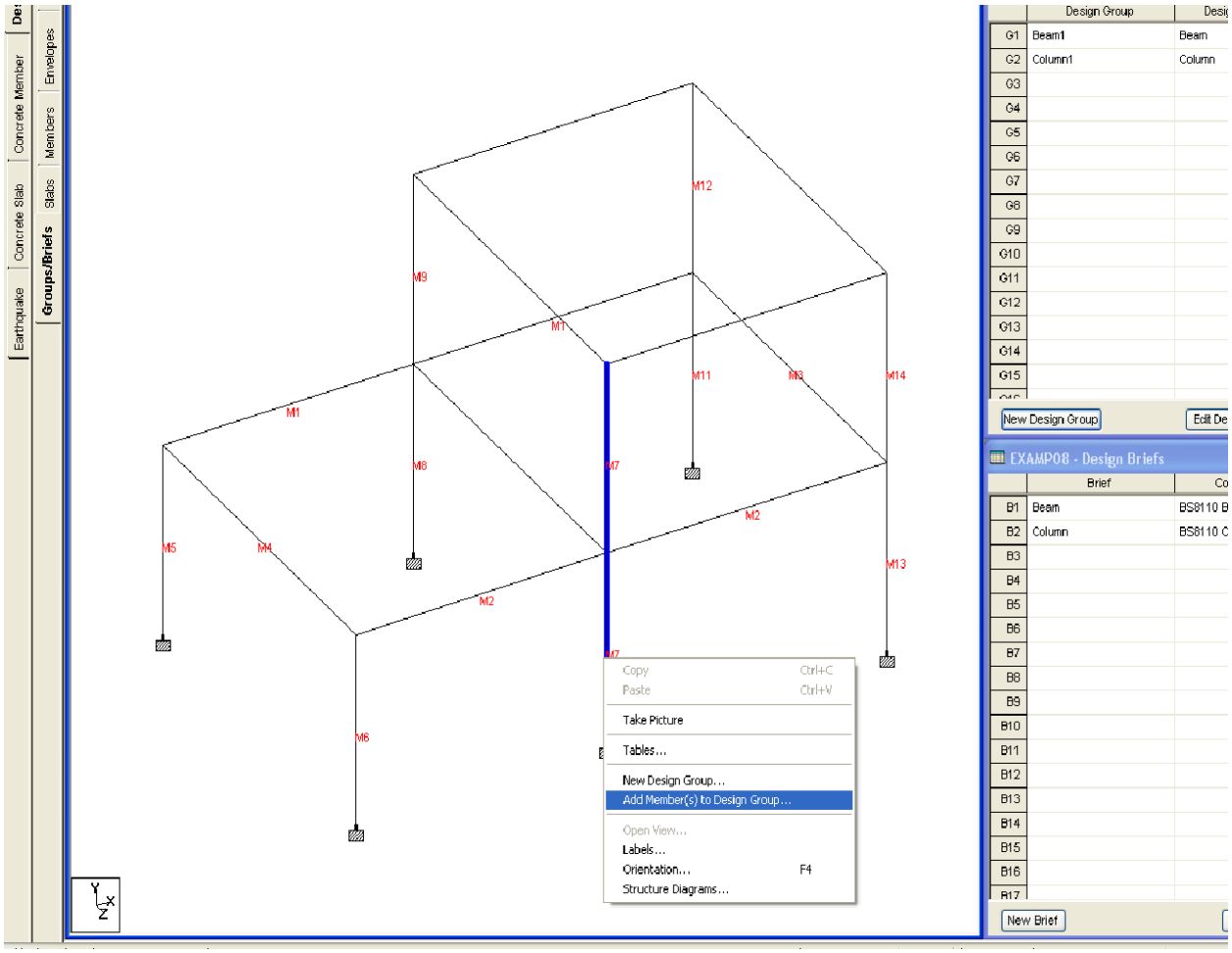

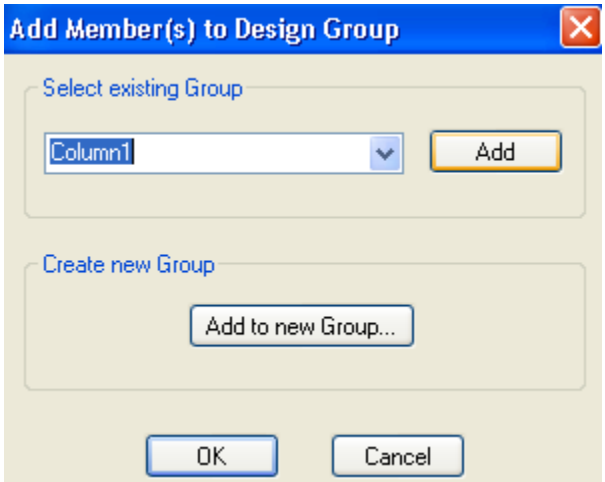

Click Add button and ok.

Member Design

Now Click On Mode→Member Design

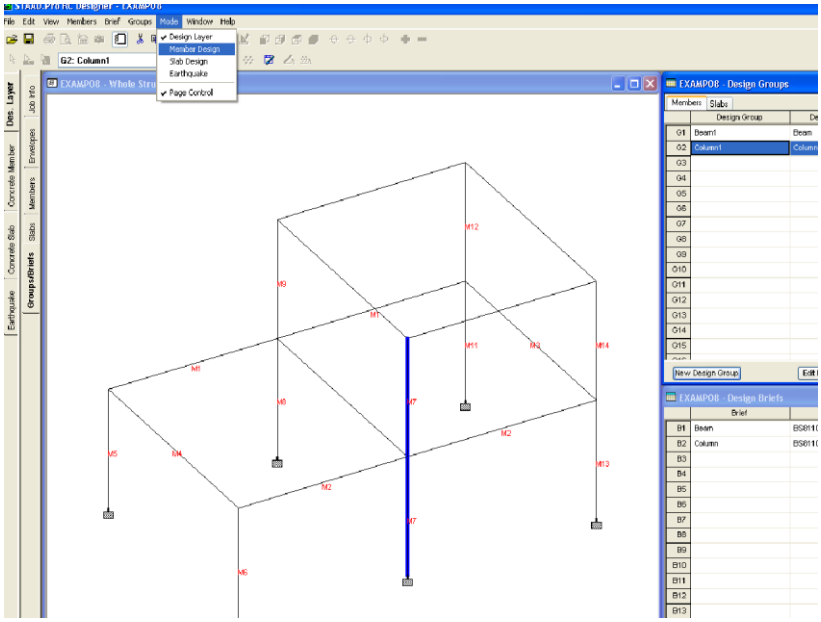

When you click on drawing tab the results appears as below.

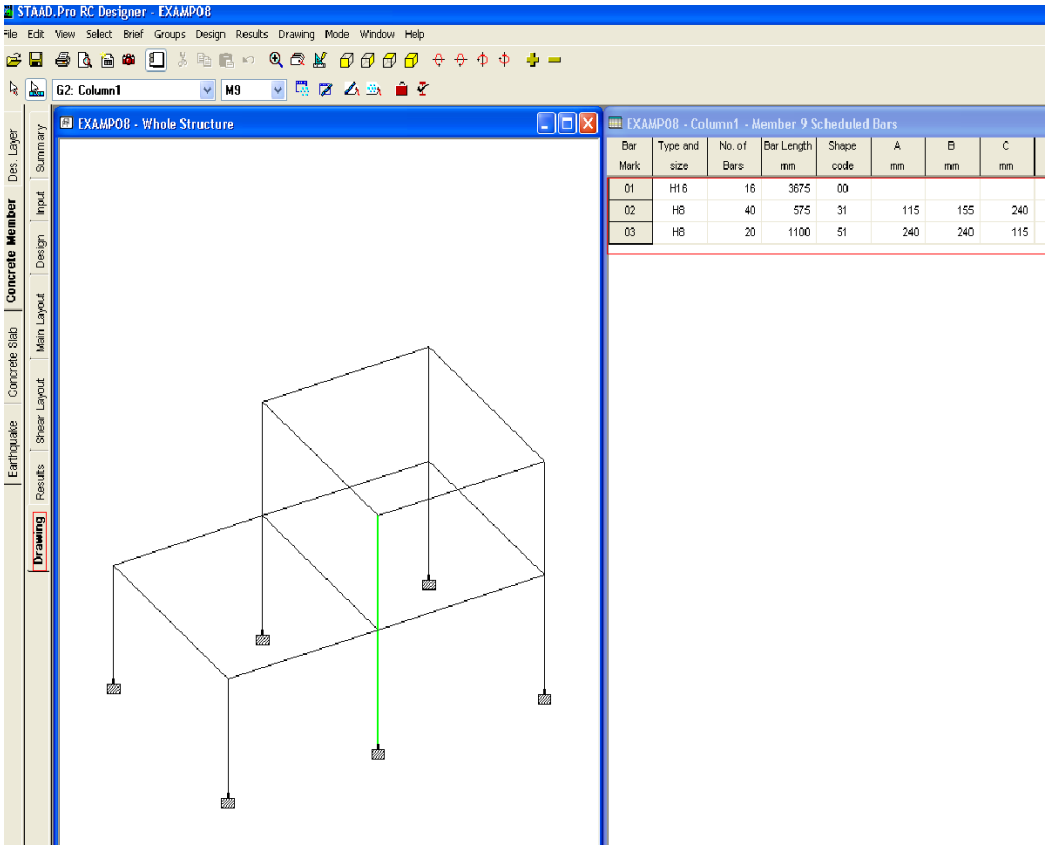

Let us click on Main Layout tab and it appears as shown below.:

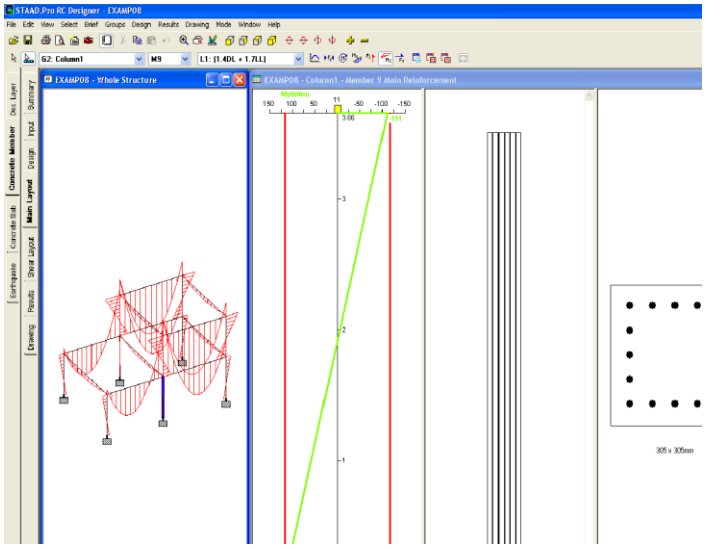

Similarly if we click on Shear Reinf layout to see the corresponding diagram and respectively.